Operation Manual

CNG 24

Natural Gas Compressor

Rev 09.16

If you have any questions on this equipment please contact Technical Support at:

Nuvair

1600 Beacon Place

Oxnard, CA 93033

Phone: 805-815-4044

FAX: 805-486-0900

Email: info@nuvair.com

Hours: Monday through Friday

8:00 AM to 5:00 PM PST USA

⚠ Warning

This Operation Manual contains important safety information and should always be available to those personnel operating this equipment. Read, understand, and retain all instructions before operating this equipment to prevent injury or equipment damage.

Every effort was made to ensure the accuracy of the information contained within. Nuvair, however, retains the right to modify its contents without notice.

Under Nuvair's system of continuous improvement, certain components may be updated or changed as higher quality or more efficient parts and assemblies become available.

Nuvair will make every effort to update manuals as parts and functional aspects change. However, the look or location of components on your product may differ from those in this manual if improvements have been made that do not affect functionality or operational procedures.

Units pictured may also be equipped with different options than those on your product. In this case, the basic operational and maintenance guidelines will still apply.

If you have problems or questions after reading the manual, stop and call Nuvair at 1-805-815-4044 for information.

Table of Contents

Table of Contents

Separate Manuals Included:

PLC Operation Manual
Compressor Parts Manual

1.0 Introduction

This manual will assist you in the proper set-up, operation and maintenance of the Nuvair CNG 24 compressor package. Be sure to read the entire manual. Throughout this manual we will use certain words to call your attention to conditions, practices or techniques that may directly affect your safety. Pay particular attention to information introduced by the following signal words:

⚠ Danger

Indicates an <u>imminently</u> hazardous situation which, if not avoided, will result in serious injury or death.

⚠ Warning

Indicates a potentially hazardous situation which, if not avoided, could result in serious personal injury or death.

⚠ Caution

Indicates a potentially hazardous situation which, if not avoided, may result in minor or moderate injury. It may also be used to alert against unsafe practices.

⚠ Notice

Notifies people of installation, operation or maintenance information which is important but not hazard-related.

1.1 Required Operator Training

This manual must be read carefully and entirely

- All compressor operators / maintenance personnel must read this entire manual with due care and attention and observe the instructions/information contained herein.
- Company owners ensure that the operator has the required training for operation of the compressor and that he/she has read the manual.

1.2 Important Information for the User

The information/instructions for compressor use contained in this manual concern the **NUVAIR** compressor: **CNG 24**

The instruction manual must be read and used as follows:

- Read this manual carefully; treat it as an essential part of the compressor;
- The instruction manual must be kept where it can readily be consulted by compressor operators and maintenance staff;
- Keep the manual for the working life of the compressor;
- Make sure updates are incorporated in the manual;
- Make sure the manual is given to other users or subsequent owners in the event of resale;
- Keep the manual in good condition and ensure its contents remain undamaged;
- Do not remove, tear or re-write any part of the manual for any reason;
- Keep the manual protected from damp and heat;
- If the manual is lost or partially damaged and its contents cannot be read it is advisable to request a copy from the manufacturer.

1.3 Foreword

The regulations/instructions for use contained in this manual constitute an essential component of the supplied compressor.

These regulations/instructions are intended for an operator who has already been trained to use this type of compressor. The contained information is necessary and essential to efficient and proper use of the compressor.

Hurried or careless preparation leads to improvisation, which is the cause of accidents.

Before beginning work, read the following suggestions carefully:
1) Before using the compressor, gain familiarity with the tasks to be completed and the admissible working position;
2) The operator must always have the instruction manual to hand;
3) Plan all work with due care and attention;
4) You must have a detailed understanding of where and how the compressor is to be used;
5) Before starting work make sure that safety devices are working properly and that their use is understood; in the event of any doubts do not use the compressor;
6) Observe the warnings given in this manual with due care and attention;
7) Constant and careful preventive maintenance will always ensure a high level of safety when using the compressor. Never postpone repairs and have them carried out by specialized personnel only; use only original spare parts.

1.4 Assistance

NUVAIR technicians are at your disposal for all routine/unscheduled maintenance work. Please forward your request for assistance to **NUVAIR** by sending a fax or e-mail to:

Phone: 1-805-815-4044
Fax: 1-805-486-0900
Email: info@nuvair.com

1.5 Responsibility

NUVAIR considers itself exonerated from any responsibility or obligation regarding injury or damage caused by:

- Failure to observe the instructions contained in this manual that concern the running, use and maintenance of the compressor;
- Violent actions or incorrect maneuvers during use or maintenance of the compressor;
- Modifications made to the compressor without prior written authorization from **NUVAIR**;
- Incidents beyond the scope of routine, proper use of the compressor.

⚠ Warning

Maintenance and repairs must only be carried out using original spare parts and qualified technicians. NUVAIR cannot be held liable for any damages caused by failure to observe this rule. The compressor is guaranteed as per the contractual agreements made at the time of sale. Failure to observe the regulations and instructions for use contained in this manual shall render the warranty null and void.

1.6 Purpose of the Machine

This high pressure compressor has been designed and built for the purpose of producing CNG (Compressed Natural Gas). LP (Low Pressure) Natural Gas is pulled from a constant supply, compressed, and fed into high pressure bottles built specifically for this purpose.

Any other use is inappropriate. The manufacturer cannot be held liable for any personal injury or damage to objects / the machine itself caused by improper use.

⚠ Danger

- **Use only tested, certified bottles: do not exceed the working pressure indicated on them.**
- **Drain air from tanks before filling when tanks have not been used for an extended period of time.**
- **Use the compressor in areas free from dust, risk of explosion, corrosion and fire.**
- **Improper use could have serious consequences for the user.**
- **Do not disconnect the hose from the fittings or the clamp when under pressure.**
- **Change the air purification filters regularly as described in section 13.0.**
- **Drain the condensate regularly as illustrated in section 13.2: Condensate Discharge.**
- **The power must be disconnected and locked out before carrying out any cleaning or maintenance tasks.**
- **Never pull a plug out by tugging the cord. Make sure the cord is not bent at a sharp angle and that it does not rub against any sharp edges. Use of extensions is not advised.**
- **Never operate the compressor when the power cord is damaged**
- **All routine and unscheduled maintenance tasks must be carried out with the compressor at a standstill, the electrical power supply disconnected or locked out and all lines are depressurized.**
- **After switching off the compressor wait about 30 minutes before carrying out any maintenance tasks so as to prevent burns.**

To ensure maximum working efficiency, **NUVAIR** has constructed the compressor with carefully selected components and materials. The compressor is tested prior to delivery. Continued compressor efficiency over time will also depend on proper use and maintenance as per the instructions contained in this manual.
All the components, connections and controls used in its construction have been designed and built to a high degree of safety so as to resist abnormal strain or in any case a strain greater than that indicated in the manual. Materials are of the finest quality; their introduction and storage in the company and their utilization in the workshop are controlled constantly so as to prevent any damage, deterioration or malfunction.

⚠ Danger

Before carrying out any work on the compressor each operator must have a perfect understanding of how the compressor works, know how to use the controls and have read the technical information contained in this manual.

- **It is forbidden to use the compressor under conditions or for purposes other than those indicated in this manual and NUVAIR cannot be held liable for breakdowns, problems or accidents caused by failure to observe this rule.**
- **Check that the fittings provide a proper seal by wetting them with soapy water: Stop the compressor and eliminate any leaks immediately when detected.**
- **Do not attempt to repair high pressure tubes by welding them or while the compressor is running.**
- **It is forbidden to tamper with, alter or modify, even partially, the systems and equipment described in this instruction manual, especially as safety guards and safety symbols are concerned.**
- **It is also forbidden to carry out work in any way other than that described or to neglect the illustrated safety tasks.**
- **The safety information and the general information given in this manual are highly important.**

1.7 Where the Compressor may be used

Check that the area in which the compressor is to be positioned is adequately ventilated: good air exchange (more than one window) with no dust and no risk of explosion, corrosion or fire. If ambient temperatures exceed 113°F (45°C) air conditioning will be required. Make sure that lighting in the area is sufficient to identify every detail (such as the writing on the info plates/stickers); use artificial lighting where daylight on its own is insufficient.

1.8 Running and Testing the Compressor

Each compressor is carefully ran and tested prior to delivery. A new compressor must nevertheless be used with caution during the first 5 working hours so as to complete proper breaking in of its components. If the compressor is subject to an excessive workload during initial use, its potential efficiency will be prematurely compromised and functionality soon reduced. During the breaking in period proceed as follows:

- After starting the unit, let the compressor run un-loaded for 5-6 minutes.

After the first 50 hours carry out in addition to the scheduled maintenance the following tasks:

- Change the compressor oil
- Change the oil filter
- Check and adjust nuts and bolts

⚠ Warning

When changing the oil filter, inspect the filter element and check for any deposits. If metal or carbon deposits are present, locate the source before restarting the compressor.

2.0 Safety Warnings

Nuvair has taken extreme care in providing you with the information you will need to operate this system. However, it is up to you to carefully read this manual and make the appropriate decisions about system safety.

⚠ Warning

This equipment is used to provide breathing Air or Nitrox for the purpose of life support. Read this manual in its entirety. Failure to heed the warnings and cautions contained in this document may result in severe injury or death.

⚠ Warning

The equipment you will be using to compress Air or Nitrox will expose you to both low and high-pressure gas. Gas, even under moderate pressures, can cause extreme bodily harm. Never allow any gas stream to be directed at any part of your body.

⚠ Warning

Any pressurized hose can cause extreme harm if it comes loose or separates from its restraint (or termination) while under pressure and strikes any part of your body. Use appropriate care in making and handling all gas connections.

⚠ Warning

Do not use any form of mineral oil or synthetic lubricant not rated for the compressor in this system. Use only the recommended Compressor Lubricant. Never mix the Compressor Lubricant with other lubricants. The use of improper lubricants can lead to fire or explosions, which may cause serious personal injury or death.

3.0 Safety And Operation Precautions

Because a compressor is a piece of machinery with moving and rotating parts, the same precautions should be observed as with any piece of machinery of this type where carelessness in operations or maintenance is hazardous to personnel. In addition to the many obvious safety precautions, those listed below must also be observed:

1) Read all instructions completely before operating any compressor or Nitrox System.
2) For installation, follow all local electrical and safety codes, as well as the National Electrical Code (NEC) and the Occupational Safety and Health Administration (OSHA) standards.
3) Only qualified pipefitters should be contracted to install high and low pressure gas lines.
4) Electric motors must be securely and adequately grounded.
5) Protect all power cables from coming in contact with sharp objects. Do not kink power cables and never allow the cables to come in contact with oil, grease, hot surfaces, or chemicals.
6) Make certain that power source conforms to the requirements of your equipment.
7) Pull main electrical disconnect switch and disconnect any separate control lines, if used, before attempting to work or perform maintenance. “Tag Out” or “Lock Out” all power sources.
8) Do not attempt to remove any parts without first relieving the entire system of pressure.
9) Do not attempt to service any part while system is in an operational mode.
10) Do not operate the System at pressures in excess of its rating.
11) Do not operate compressor at speeds in excess of its rating.
12) Periodically check all safety devices for proper operation. Do not change pressure setting or restrict operation in any way.
13) Be sure no tools, rags or loose parts are left on the Compressor System.
14) Do not use flammable solvents for cleaning.
15) Exercise cleanliness during maintenance and when making repairs. Keep dirt away from parts by covering parts and exposed openings with clean cloth or Kraft paper.
16) Do not operate the compressor without guards, shields, and screens in place.
17) Do not install a shut-off valve in the compressor discharge line, unless a pressure relief valve, of proper design and size, is installed in the line between the compressor unit and shut-off valve.
18) Do not operate in areas where there is a possibility of inhaling carbon monoxide, carbon dioxide, nitrogen, or flammable or toxic fumes.
19) Be careful when touching the exterior of a recently run electric, gasoline, or diesel motor - it may be hot enough to be painful or cause injury. With modern motors this condition is normal if operated at rated load - modern motors are built to operate at higher temperatures.
20) Inspect unit daily to observe and correct any unsafe operating conditions found.
21) Compressed air from this machine absolutely must not be used for food processing or breathing air without adequate downstream filters, purifiers and controls and periodic air quality testing.
22) Always use a pressure-regulating device at the point of use, and do not use at a pressure greater than marked maximum pressure.
23) Check hoses for weak or worn conditions before each use and make certain that all connections are secure.

The user of any compressor or Nitrox System manufactured by Nuvair is hereby warned that failure to follow the preceding Safety and Operation Precautions can result in injuries or equipment damage. However, Nuvair does not state as fact or does not mean to imply that the preceding list of Safety and Operation Precautions is all-inclusive, and further that the observance of this list will prevent all injuries or equipment damage.

4.0 Description of the Compressor

CNG 24 shown installed and in service

Certified Pipefitter installation and labeling

Stage Pressure Gauges

5.0 System Components

Coltri MCH24 High Pressure Compressor
4 Cylinder, 4 stage, Air Cooled

Electric Motor: 220V/230V or 440V/460V, 3 Phase, 50 or 60 Hz
Interstate Pressure Gauges
3 Condensate Separators
Large Stainless Steel Interstage Cooling Tubes
Low Pressure Oil Pump with Filter
Oil Level Sight Gauge and Oil Pressure Gauge
Automatic Condensate Drains
Load less Start
Low Oil Shutdown Switch
High Temp Switch set at 350° F
Over Pressure Safety Valves:
- **1st Stage: 75PSI**
- **2nd Stage: 365PSI**
- **3rd Stage: 1525PSI**
- **4th Stage: 3990PSI**

Dual Filter Filtration (60,000 Cu. Ft.) (Additional Filtration Optional)

Lubricant:
Nuvair 800 ™ Triester Based Lubricant

6.0 Compressor Specifications

	Nuvair CNG 24	
SCFM Filling an 80 cu ft. tank from 500PSI	21 SCFM, 595 L/Min	
FAD	17.5FAD, 496 L/Min	
Electrical Power Requirements		
230V/E3/60 Hz **400V/E3/50 Hz** **460V/E3/60 Hz**	33.8 Amp 15 HP (11KW) 19.4 Amp 15HP (11KW) 16.9 Amp 15HP (11KW)	
Max Operating Pressure	Up To 5000 PSI (345 Bar)	
RPM	1100	
Number of Stages	4	
Lubrication	Pressure Lubrication, capacity 1.2 gallons (4.5 liters)	
Oil Pressure	58 psi,4 bar 21.75 psi, 1.5 bar 14.5 psi, 1 bar	**cold** **routine use** **minimum pressure**
Dimensions (WxDxH)	31in x 49in x 61in (79cm x 124cm x 155cm)	
Weight	930 lb (420 kg)	

⚠ Caution

Ambient room temperature should never exceed 113°F (45°C) during operation of the Compressor System. Operation at higher temperatures may lead to system damage and malfunction.

6.1 Unpack and Installation

1) Please read all information supplied before physically installing the Compressor System.
2) Unpack the system and remove from the pallet. Visually inspect the system to make sure there has been no damage during shipping. If damaged, please call Nuvair to file a damage report. Please take photos and supply detailed information about the damage.
3) Place the system in a permanent location allowing a minimum spacing of 36” from adjacent walls. Select a location where ambient room temperature is a minimum of +41°F to a maximum +113°F (°C Min. +5° - Max. +45°).
4) Contact a qualified pipefitter to make any mechanical connections

6.2 Electrical Connection

- Please read all information supplied before Connecting Electricity to the Compressor System.
- You should hire a licensed electrician to install any electric compressors purchased from Nuvair.
- The compressor is delivered with raw leads ready to be installed into a junction box.
- In the event a plug is needed, Nuvair recommends that the licensed electrician doing the install determines the plug necessary.
- Make sure your electrician follows approved and compliant standards for your location.

7.0 Checks to be run at the start of each working day

Inspect the exterior of the compressor (couplings, pipes, pneumatic components etc.) and check for any oil leaks. Replace parts where necessary or contact **NUVAIR**.

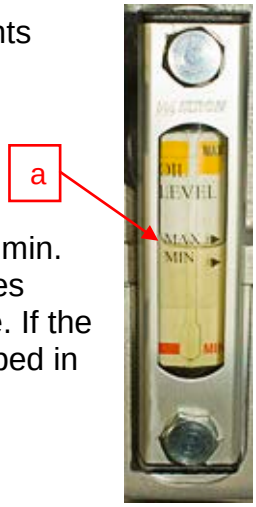

7.1 Lubricating oil level check

Check that the level of lubricating oil **(a)** is within acceptable limits (i.e. between min. and max.). Note that an excessive quantity of oil can leave deposits on the valves while too low a level prevents proper lubrication and could cause engine seizure. If the oil level is not within the minimum and maximum limits top up or drain as described in section 11.8 Changing the lubricating oil and filter".

7.2 Check that the refill hoses are in good condition

Inspect the refill hoses and make sure there are no cuts, holes, abrasions, leaks etc. If necessary replace with new hoses.

7.3 Storing technical documentation

The use and maintenance manual and its appendices must be stored carefully and must always be kept where they can be accessed easily for immediate review.

⚠ Warning

This Operation Manual contains important safety information and should always be available to those personnel operating this equipment. Read, understand, and retain all instructions before operating this equipment to prevent injury or equipment damage.

8.0 Gauge Panel

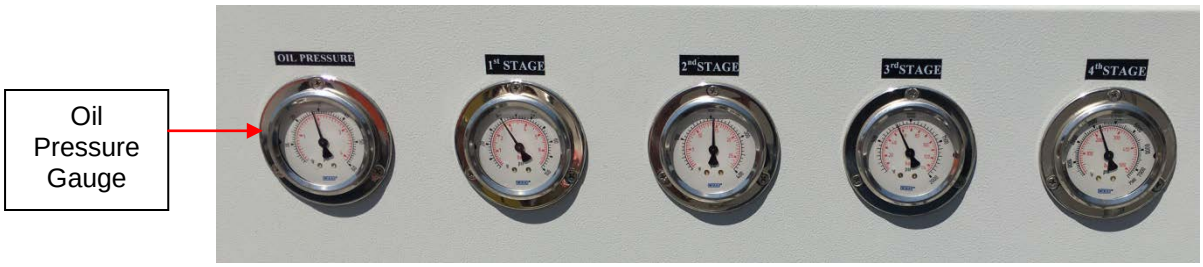

1st stage pressure gauge (1)
The **(1)** gauge indicates the pressure inside the 1st compression stage. If the Pressure is not between 45 PSI (3 bar) and 60 PSI (4 bar) switch off the compressor and contact Nuvair.

2nd stage pressure gauge (2)
The **(2)** gauge indicates the pressure inside the 2nd compression stage. If the Pressure is not between 230 PSI (16 bar) and 290 PSI (20 bar) switch off the compressor and contact Nuvair.

3rd stage pressure gauge (3)
The **(3)** gauge indicates the pressure inside the 3rd compression stage. If the Pressure is not between 940 PSI (65 bar) and 1200 PSI (80 bar) switch off the compressor and contact Nuvair.

4th stage pressure gauge / Working Pressure Gauge (4)
This **(4)** gauge indicates the pressure as it exits the compressor. If the Pressure fails to reach the pressure set on the pressure switch, switch off the compressor and contact Nuvair.

Oil Pressure Gauge
If No Oil Pressure or High Pressure readings occur, switch off compressor and contact Nuvair.

Oil Pressure	58 psi (4 Bar)	**Cold**
	21.75 psi (1.5 Bar)	**Routine Use**
	14.5 psi (1 Bar)	**Minimum Pressure**

9.0 Overpressure Safety Valves

Each stage of the compressor is equipped with an overpressure relief valve to ensure that the unit will not be damaged in the event that the pressure shutoff switch fails to work.

1st Stage: 75PSI
2nd Stage: 365PSI
3rd Stage: 1525PSI
4th Stage: 3990PSI

⚠ Caution

Tampering with the safety valve to increase the pressure setting is strictly forbidden. Tampering with the safety valve can seriously damage the compressor, cause serious injury to personnel and renders the warranty null and void.

10.0 Bottle Refill

⚠ Warning

Use only tested bottles (as proven by a test stamp and/or certificate). The working and bottle refill pressures are shown on the bottles themselves. It is forbidden to refill them at a pressure greater than that indicated.

11.0 Maintenance

11.1 Foreword

To obtain the best possible performance from the compressor and ensure a long working life for all its parts it is essential that personnel follow the use and maintenance instructions with extreme diligence. It is thus advisable to read the information below and consult the manual every time an inconvenience arises. For further information please contact Nuvair:

Phone: 805-815-4044 **Email:** info@nuvair.com

11.2 General

- Proper preservation of the compressor requires thorough cleaning.
- This type of refill station, designed and built according to the most advanced technological criteria, requires only minimum preventive and routine maintenance.
- Before carrying out any maintenance tasks, run checks and/or controls on the compressor, switch off the compressor, remove the plug from the mains socket.
- The residual pressure present in the compressor and all lines must be released.
- During disassembly and re-assembly of the compressor, always use suitable wrenches/tools so as not to damage the relevant components.
- Loosen stiff parts with a copper or plastic mallet.
- When refitting parts make sure they are clean and lubricated sufficiently.
- Compressor maintenance tasks must only be carried out by authorized personnel and recorded on page 31 Maintenance Log of this manual.

11.3 Unscheduled Work

Involves repairs and/or replacement of the mechanical parts of one or more compressor components, this work normally needs to be done after some years of use. If substantial modifications are made, the manufacturer cannot be held liable for any dangers that might arise. This work must be carried out by a Nuvair qualified mechanic.

11.4 Scheduled Maintenance Table

Maintenance	Every 5 hours	Every Day	Every Year	250 (hours)	500 (hours)	1000 (hours)	3000 (hours)
Lubricating Oil Check		○					
Automatic Shutdown Check		○					
Condensate Container discharge	○	○					
Belt wear and tension				○	●		
Intake filter						●	
Fitting / hose leak check			○		○		
Oil Filter and Oil change				●		●	
Instrument Check						○	
1st – 2nd – 3rd stage Valve replacement					○	●	
4th stage valve replacement					●		
Water & HP oil separator replacement							●
HP filter body replacement							●

○ Checking and cleaning ● Change

11.5 Troubleshooting

Problem	Cause	Solution
-The electric motor does not start	•Phase missing	•Check fuses or capacitor
-Rotation speed and flow rate decrease	•Motor power too low •The belt slips	•Check the motor and the line •Restore drive belt tension
-The flow rate diminishes without rpm decreasing	•Valves not working •4th stage piston worn •Fittings loose / leaking seals •Intake filter clogged •Intake extension kinked •Piston or piston rings worn	•Contact technical support •Contact technical support •Check for leaks with soapy water and eliminate them •Replace filter •Straighten, use stiffer pipe •Contact technical support
-Air smells of oil	•Cartridge filter exhausted •Piston rings worn •Condensate not being drained	•Replace filter •Contact technical assistance •Check Auto Drains & manually drain more often
-Compressor overheats	•Direction of rotation wrong •Cooling tubes dirty •Incomplete valve closure (causing overload of another stage) •Poor Ventilation	•Check direction of rotation •Clean Cooling Tubes •Contact technical support •Contact technical support

11.6 Checking and changing the lubricating oil and filter

During the compressors initial break-in period the original oil filter and lubricating oil must be changed at the **50 hour** mark. After the initial change of lubricants and filter the oil and oil filter must be changed every 1000 hours of use or annually, whichever comes first.

⚠ Warning

Use only the specified Nuvair Lubricants in this system. The use of incompatible lubricants presents a risk of fire and/or explosion, and may result in system damage. This can lead to severe personal injury and death.

⚠ Danger

Do not carry out these tasks if the compressor has only just shut down; wait for the compressor to cool. Pressure must be drained before opening LP Fill Plug.
Any oil spilt during the oil/filter change could cause personnel to slip; wear protective garments and anti-slip footwear and remove traces of oil immediately.
Both oil and filter are classified as special wastes and must therefore be disposed of in compliance with the anti-pollution laws in force.
All maintenance work must be carried out with the compressor OFF and the power supply lead unplugged from the main socket.

11.7 Checking the Oil Level

⚠ Notice

The compressor must be placed on a solid surface with a tilt of no more than 5°.

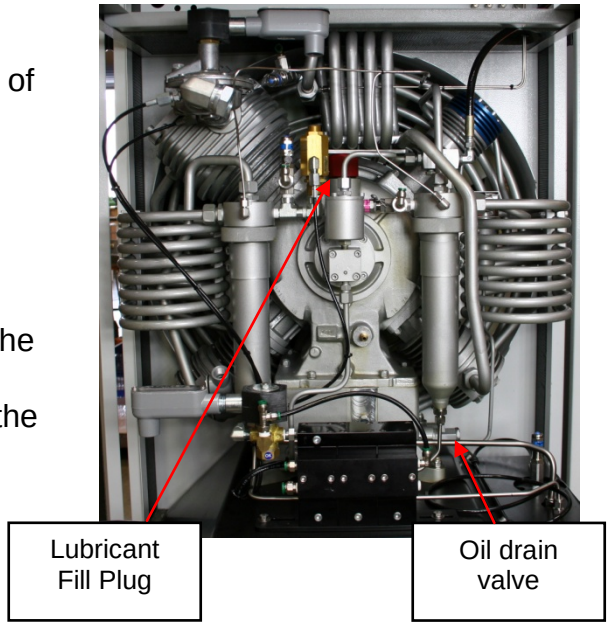

The oil level must be checked every 5 working hours of the compressor.
The oil level must be between the minimum and the maximum shown on the oil level indicator.
(See close-up picture bottom of next page)
If the oil level is above the maximum level:

- Position a recipient under the drain hose so that the oil flows into the exhausted oil recipient.
- Open the drain valve and let the oil flow out until the oil level returns within the max. and min. limits
- Close the drain valve.

If the oil level is below the minimum level:

- Open the top fill plug
- Top off with oil until the level returns within the max. and min. limits
- Close the fill plug.

⚠ Caution

After running the compressor, the lubricant will be very hot. Take care when removing the drain plug and draining the lubricant to avoid burns.

⚠ Notice

Recommended Nitrox Compressor Lubricant is changed when the first 25 hours of use is reached, then change lubricant in 100 hour cycles or annually.

⚠ Caution

Wear gloves when handling compressor lubricant. If contact with skin is made, wash the skin surface with soap and water.

⚠ Caution

Always wear goggles when handling compressor lubricant. These materials can cause eye irritation. If you accidentally get lubricant into your eyes, flush with fresh water for 15 minutes and contact a physician if irritation develops.

⚠ Caution

Compressor lubricant should be incinerated after use in a licensed facility in accordance with Federal, State, and local regulations.

11.8 Changing the lubricating oil and filter

The lubricating oil must be changed every 1000 working hours or annually. Every time the lubricating oil is changed the oil filter must be changed too.

- position a recipient under the drain tap (**a**) so that the oil flows into the exhausted oil recipient (recipient capacity of at least 1.2 gallons or 5 liters required).
- open the oil fill plug (**g**).
- open the plug (**a**) and let all the oil flow out.
- unscrew the fittings (**c**) and remove the pipe (**b**).
- remove the fixing screws (**e**) and the cover (**d**).
- replace the filter (**f**) with a new one.
- re-close the plug (**d**) with the screws (**e**).
- put the pipe (**b**) back and tighten the fittings (**c**).
- close the drain tap (**a**). -remove the fill plug (**g**).
- fill the oil sump with 1.3 gallons or 5 liters of oil from top oil plug
- close the oil fill plug (**g**).
- switch on the compressor and run it depressurized for 30 seconds.
- switch off the compressor and remove the plug from the mains socket.
- check the oil level (**h**); if it is not between the min. and max. lines proceed with the tasks described in paragraph 11.7.

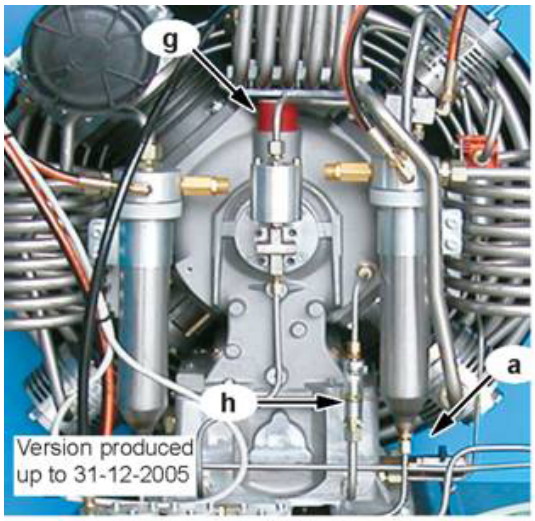

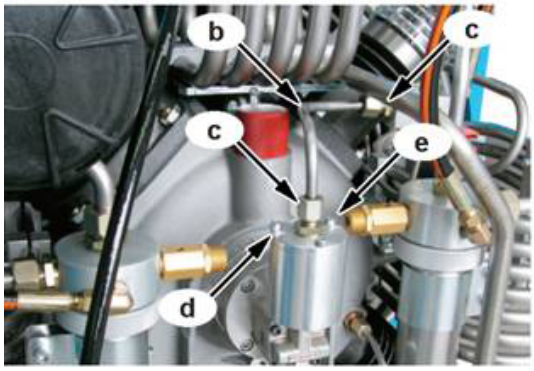

(h) Version 2007 to present

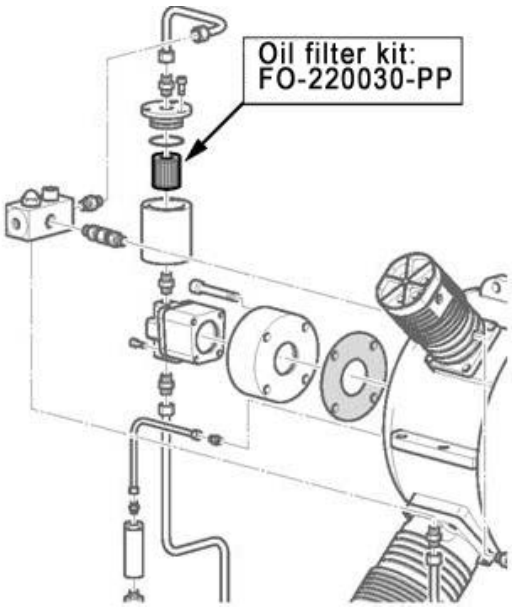

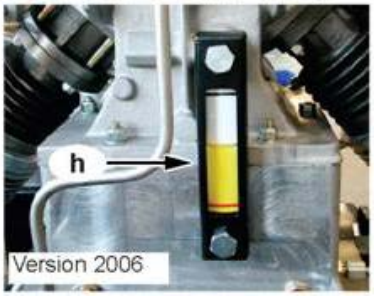

11.9 Tightening Torque Values – Should be done at 25 hour maintenance

The table below shows tightening torques for bolts or hexagonal-head screws or socket screws lubricated with grease, except for specific cases indicated in the manual.

Pipe connections (swivel nuts, compression fittings) should be finger tight, PLUS an additional **1/2 turn**.

Tightening Torque Values	
Thread	**Maximum Torque**
M6 - 1/4”	**10**Nm (**7**ft-lbs)
M8 - 5/16”	**25**Nm (**18**ft-lbs)
M10 - 3/8”	**45**Nm (**32**ft-lbs)
M12 - 1/2”	**75**Nm (**53**ft-lbs)
M14 - 9/16”	**120**Nm (**85**ft-lbs)
M16 - 5/8”	**200**Nm (**141**ft-lbs)

6 bolt and 4 bolt torque sequence

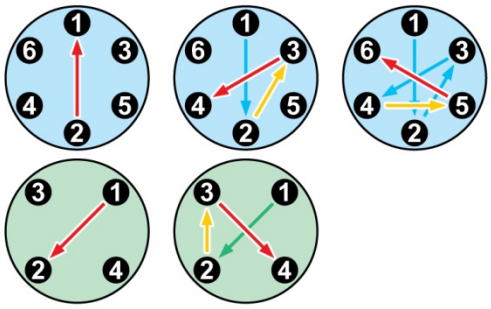

11.10 Changing the Gas intake filter

The intake filter must then be changed every 1000 working hours or annually.

1. Close Gas Feed line
2. Relieve pressure from the system
3. Unscrew the air filter cover screws
4. Remove the air filter cartridge replace with a new one
5. Replace the cover and screws, ensuring the sealing o-ring stays in place

⚠ Danger

Do not carry out these tasks if the compressor has just shut down and is hot; wait for the compressor to cool down. All maintenance work must be carried out with the compressor OFF and the power supply lead unplugged from the wall socket.

⚠ Notice

If the compressor is used in a dusty environment the filter change interval should be reduced to every 100 hours.

12.0 Transmission Belt

Belt tension must be checked monthly. The transmission belts must be replaced every 500 working hours of the compressor.

12.1 Checking the Transmission Belt

To check for proper transmission belt tension (**a**) exert a pressure of approximately 22lbs. (10 Kg) on the belts; check that the belts do not flex by more than 1 cm with respect to their original position. Should they flex more than this the belts must be replaced.

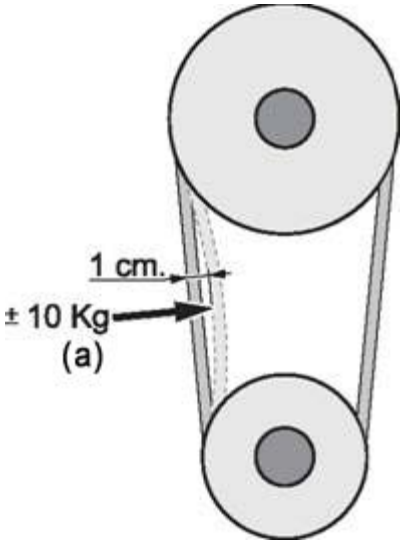

13.0 HP Compressor Filtration Active Carbon Filters / Molecular Sieve

The HP Compressor comes standard with Carbon Molecular Sieve filtration. See 13.1 for details on filter element life factors.

1) Shut down the Compressor System
2) Open Manual Bleed Drain Valve on filter towers to drain pressure. Leave valve open.
3) Unscrew the Filter Canister Cap.
4) Remove expended Element from Filter Canister.
5) Install New Element place pressure on element to seat the element.
6) Reinstall Cap to Canister.
7) Close Manual Condensate Valve.

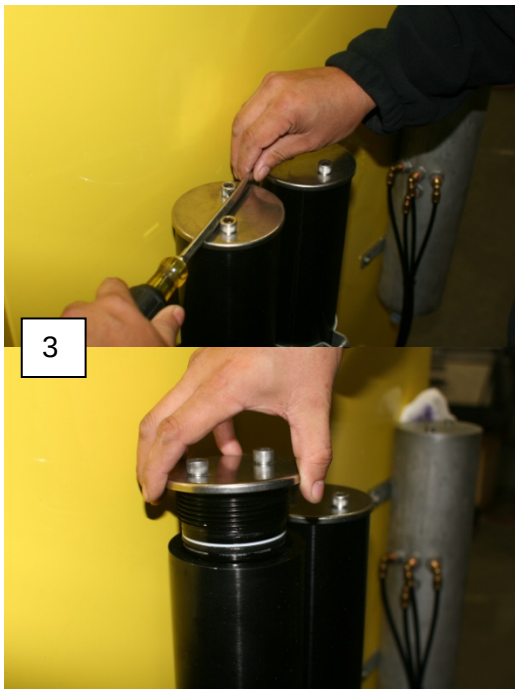

⚠ Warning

Be sure that all pressure has been relieved from the system prior to opening any filtration canister. Failure to vent pressure from the system prior to opening the canister can lead to serious personal injury or death. Difficulty turning the filter cap may indicate there still is pressure in the filter canister.

14.0 Power Requirements

⚠ Warning

Never use extension cords to provide power to your Compressor System. The system must be properly wired according to national and local electrical codes by a qualified electrician. Improper wiring may lead to fires, which can cause serious personal injury or death.

Electrical wiring and connections should be made by a qualified electrician in accordance with all national and local electrical codes. Check all System Specifications provided in this manual when working on the Compressor System the main breaker at the power source must be “locked out” in the Off position.

14.1 Amperage Load for System

230V/E3/60 Hz	33.8 Amp 15 HP (11KW)	45.8 Amp 20 HP (15KW)
400V/E3/50 Hz	19.4 Amp 15HP (11KW)	26.3 Amp 20HP (15KW)
460V/E3/60 Hz	16.9 Amp 15HP (11KW)	22.9 Amp 20HP (15KW)

15.0 Storage

Should the compressor not be used, it must be stored in a dry sheltered area at an ambient temperature of between 32°F and 104°F (0 °C and 40 °C). Store the compressor away from sources of heat, flames or explosive.

15.1 Stopping the machine for a brief period

If you do not intend to use the compressor for a brief period proceed with general cleaning. Once the compressor has cooled down you should wipe off dirt, dust and moisture on the compressor and the surrounding area.

15.2 Stopping the machine for a long period

If you do not intend to use the compressor for a long period, switch the power off at the main breaker, extract the molecular sieve filter cartridges, and proceed with a thorough general cleaning of the machine. It is advisable during downtimes that the compressor is run for 20 minutes every 15 days.

16.0 Dismantling and Putting the Compressor Out Of Service

Should you decide not to use the compressor or any of its parts any longer you must precede with its dismantling and putting it out of service. These tasks must be carried out in compliance with the standards in force.

⚠ Warning

Should the compressor, or a part of it, be out of service its parts must be rendered harmless so they do not cause any danger.

⚠ Warning

Bear in mind that oil, filters or any other compressor part subject to differentiated waste collection must be disposed of in compliance with the standards in force.

16.1 Waste Disposal

Use of the compressor generates **waste** that is classified as **special**. Bear in mind that residues from industrial, agricultural, crafts, commercial and service activities not classified by quality or quantity as urban waste must be treated as special waste. Deteriorated or obsolete machines are also classified as special waste. Special attention must be paid to active carbon filters as they cannot be included in urban waste: observe the waste disposal laws in force where the compressor is used. Bear in mind that it is compulsory to record loading/unloading of exhausted oils, special wastes and toxic-harmful wastes that derive from heavy/light industry processes. Exhausted oils, special wastes and toxic-harmful waste must be collected by authorized companies. It is especially important that exhausted oils be disposed of in compliance with the laws in the country of use.

⚠ Notice

Disassembly and demolition must only be carried out by qualified personnel.

16.2 Dismantling the compressor

Dismantle the compressor in accordance with all the precautions imposed by the laws in force in the country of use. Before demolishing request an inspection by the relevant authorities and relative report. Disconnect the compressor from the electrical system. Eliminate any interfaces the compressor may have with other machines, making sure that interfaces between remaining machines are unaffected. Empty the tank containing the lubricating oil and store in compliance with the laws in force. Proceed with disassembly of the individual compressor components and group them together according to the materials they are made of: the compressor mainly consists of steel, stainless steel, cast iron, aluminum and plastic parts. Then scrap the machine in compliance with the laws in force in the country of use.

⚠ Notice

At every stage of demolition observe the safety regulations contained in this manual carefully.

17.0 Instructions for Emergency Situations

17.1 Fire

In the event of fire, use a CO_2 fire extinguisher in compliance with the relevant standards in force.

Always call the fire department in case of fire.

18.0 Maintenance Register

18.1 Customer Service

Customers continue to receive assistance after the purchase of a compressor. To this end **NUVAIR** has created a customer service network covering the entire country.

⚠ Notice

Our qualified technicians are at your disposal at any time to carry out maintenance work or repairs; we use only original spare parts so as to ensure quality and reliability.

18.2 Scheduled Maintenance

The scheduled maintenance program is designed to keep your compressor in perfect working order. Some simple tasks, described in this manual, can be carried out directly by the customer; others, instead, require that the work be carried out by trained personnel. For the latter we recommend you always contact our office. This section provides a simple tool with which to request assistance and register completed scheduled maintenance work. Start-up and maintenance checks/tasks, once completed by our qualified technician, are registered in this maintenance chapter by way of an official stamp, signature and inspection date; the number of working hours is also registered. The maintenance schedules/coupons easily let you know when our assistance service should be contacted to carry out work.

18.3 Using the compressor under heavy duty conditions

Where compressors are used in particularly difficult conditions (high high temperatures, extended run times), scheduled maintenance tasks must be carried out more frequently as per the advice given by our assistance network.

18.4 Nuvair Customer Care Contact

Telephone: 1-805-815-4044
Fax: 1-805-486-0900
e-mail: info@nuvair.com
web: www.nuvair.com/manuals.html

19.0 Spare Parts List

HP Air Compressor parts list.

Compressor System Components	Type	Part Number
Compressor Lubricant	Nuvair 800, 1 Gal (Other Sizes Available)	9412
HP Filter Elements		
Black Canisters	Absorbent Filter (x2)	SC000543-CNG
Air Intake Filter Element	Gas Filter Cartridge	05-01-040/C
Intake Canister O-Ring		05-01-040/O
Oil Filter	Oil Filter MCH 36-06-007	FO-220030-PP

20.0 Service Log

Date	Technician Name	Service Performed

21.0 Appendix

NUVAIR COMPRESSOR SYSTEM WARRANTY

NUVAIR extends a limited warranty, which warrants the Compressor System to be free from defects in materials and workmanship under normal use and service for a limited period. All other Original Equipment Manufacturer (OEM) components used in the system are warranted only to the extent of the OEM's warranty to NUVAIR. NUVAIR makes no warranty with respect to these OEM components, and only warrants the workmanship that NUVAIR has employed in the installation or use of any OEM component. This warranty is not transferable.

NUVAIR will, at its discretion and according to the terms as set forth within, replace or repair any materials which fail under normal use and service and do not exhibit any signs of improper maintenance, misuse, accident, alteration, weather damage, tampering, or use for any other than the intended purpose. Determination of failure is the responsibility of NUVAIR, which will work together with the customer to adequately address warranty issues. When any materials are repaired or replaced during the warranty period, they are warranted only for the remainder of the original warranty period. This warranty shall be void and NUVAIR shall have no responsibility to repair or replace damaged materials resulting directly or indirectly from the use of repair or replacement parts not approved by NUVAIR.

Maintenance Items:
Any materials which are consumed, or otherwise rendered not warrantable due to processes applied to them, are considered expendable and are not covered under the terms of this policy. This includes maintenance and consumable items listed as part of a suggested maintenance program included with system documentation.

Return Policy:
Application for warranty service can be made by contacting NUVAIR during regular business hours and requesting a Return Material Authorization number. Materials that are found to be defective must be shipped, freight pre-paid, to the NUVAIR office in Oxnard, California. Upon inspection and determination of failure, NUVAIR shall exercise its options under the terms of this policy. Warranty serviced materials will be returned to the customer via NUVAIR's preferred shipping method, at NUVAIR's expense. Any expedited return shipping arrangements to be made at customer's expense must be specified in advance.

Limitation of Warranty and Liability:
Repair, replacement or refund in the manner and within the time provided shall constitute NUVAIR'S sole liability and the Purchaser's exclusive remedy resulting from any nonconformity or defect. NUVAIR shall not in any event be liable for any damages, whether based on contract, warranty, negligence, strict liability or otherwise, including without limitation any consequential, incidental or special damages, arising with respect to the equipment or its failure to operate, even if NUVAIR has been advised of the possibility thereof. NUVAIR makes no other warranty or representation of any kind, except that of title, and all other warranties, express or implied, including warranties of merchantability and fitness for a particular purpose, are hereby expressly disclaimed. No salesman or other representative of NUVAIR has authority to make any warranties.

Additional Record of Changes

It is the responsibility of the owner of this product to register their ownership with Nuvair by sending the warranty card provided to Nuvair. This card is to establish registration for any necessary warranty work and as a means of communication that allows Nuvair to contact the user regarding this product.

The user must notify Nuvair of any change of address by the user or sale of the product. All changes or revisions to this manual must be recorded in this document to ensure that the manual is up to date.

Change Date	Description of Change
04/30/14	**Updated pictures and information throughout manual**

Intentionally left blank

Phone 1-805-815-4044
Fax 1-805-486-0900
1600 Beacon Place
Oxnard, CA 93033 USA
Email: info@nuvair.com
Web: www.nuvair.com