COLTRI COMPRESSORS

MADE IN ITALY

Revisione 04 del 09-05-2013

CATALOGO RICAMBI - SPARE PARTS LIST

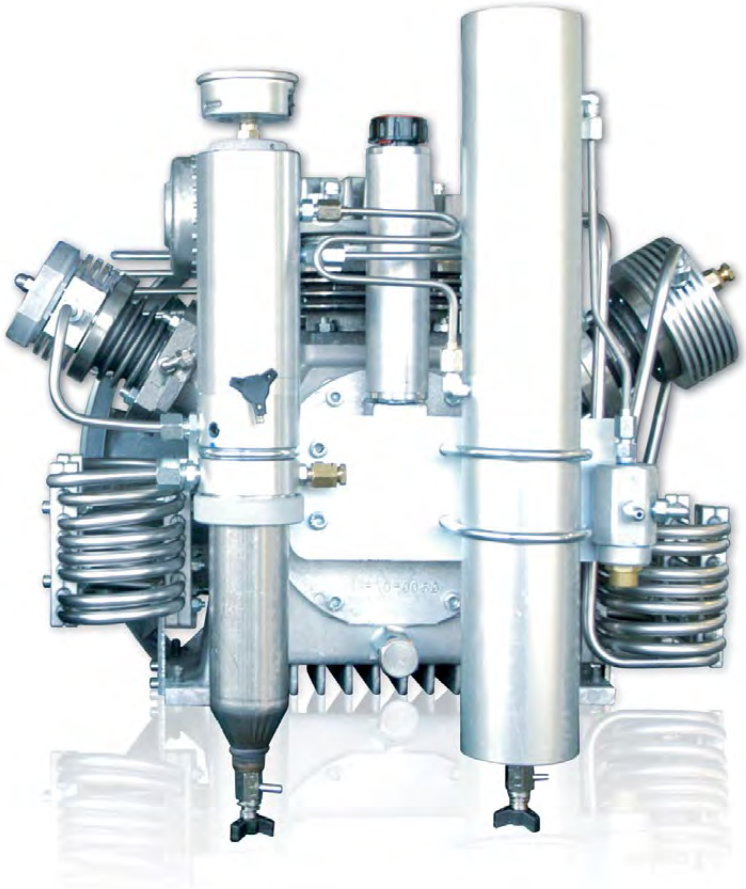

MCH-13-16/SH Standard
MCH-13-16/DL Standard
MCH-13-16/DY Standard
MCH-13-16/EM Standard
MCH-13-16/ET Standard
MCH-13-16/SH Tech
MCH-13-16/DL Tech
MCH-13-16/DY Tech
MCH-13-16/SH MiniTech
MCH-13-16/DL MiniTech
MCH-13-16/DY MiniTech
MCH-8-11/EM Compact
MCH-13-16/ET Compact
MCH-26-32/ET Compact
MCH-13-16-18/ET Compact Evo
MCH-13-16/ET Compact M
MCH-13-16-18/ ETS Super Silent Evo
MCH-13-16/ETS MiniSilent
Tropical
Tropical Plus

R-MCH-13-16-0413

MCH-13-16

Compressore ad alta pressione per aria respirabile e gas tecnici
High pressure compressors for pure breathing air and technical gases

Condizioni generali di vendita

1. Le forniture di apparecchi e merci di ns produzione sono soggette alle sottoscritte "CONDIZIONI GENERALI DI VENDITA, CHE SONO ESSENZIALI E CHE IL COMMITTENTE OD ACQUIRENTE DICHIARA IN MODO ESPLICITO DI CONOSCERE E DI APPROVARE ED ACCETTARE INTEGRALMENTE".
Eventuali deroghe debbono risultare da apposito ed esplicito accordo scritto.

2. Tutte le ordinazioni si intendono conferite salvo accettazione da parte della ns Società. L'eventuale annullamento totale o parziale degli ordini non comporta alcuna ns responsabilità civile e pertanto non può dar luogo a richieste di indennizzo di sorta. Gli ordini si intendono accettati solo dopo approvazione con conferma d'ordine scritta. I ns imballi sono suscettibili di variazioni.

3. I beni consegnati diverranno proprietà dell'acquirente soltanto con il pagamento dell'ultima rata, comprensiva di capitale, interessi e spese. La venditrice, a fronte del mancato pagamento di una rata che superi l'ottava parte del prezzo, avrà la facoltà di risolvere il contratto e di richiedere la restituzione dei beni. In tal caso verranno trattenute tutte le rate già pagate a titolo di indennità per l'uso e la penale di inadempimento. La restituzione dei beni avverrà a cura del venditore e a carico dell'acquirente.

4. I prezzi di vendita sono quelli del listino in vigore all'atto della consegna della merce ordinata. E' di facoltà pertanto della ns Società variare in qualunque momento il prezzo di listino di vendita sia per quanto riguarda i prodotti da noi fabbricati che quelli da noi commercializzati e per i quali il fornitore potrebbe richiederci aumenti improvvisi per qualsiasi causa che esula dalla ns volontà. I prezzi di listino si intendono per merce resa franco ns SEDE salvo diversi accordi scritti. IVA ed ogni altro tributo presente o futuro si intendono a carico dell'acquirente. Il prezzo pattuito con il presente si intende accettato dall'acquirente e pertanto la ns Società non accetta sconti od arrotondamenti.

5. Eventuali termini di consegna indicati sulle ordinazioni non sono impegnativi per la ns Società e verranno rispettati compatibilmente con le ns possibilità di magazzino. Ritardi nell'evasione degli ordini non potranno dare adito ad annullamento da parte dell'acquirente o a richiesta di risarcimenti per qualsiasi motivo e/o ragione.

6. La merce viaggia esclusivamente a rischio e pericolo dell'acquirente anche se il trasporto avvenga con automezzi ns o di terzi da noi delegati. Le spese di trasporto si intendono sempre ed esclusivamente a carico dell'acquirente salvo diversi accordi scritti. E' dovere e compito preciso del committente verificare le condizioni dei ns imballi all'atto del ricevimento e prima che il documento di trasporto venga firmato per accettazione. Eventuali non conformità sull'aspetto esteriore dei beni, su avarie e/o pesi non conformi, colli mancanti, dovranno essere segnalate per iscritto sul documento di trasporto, la cui copia ci viene ritornata. Non si accettano reclami sulle merci in consegna, trascorsi 8 giorni dal loro ricevimento e per nessun motivo le merci devono essere rese senza nostra previa autorizzazione scritta.

7. La garanzia dovuta dalla Società su apparecchi e merci di ns produzione è limitata per un periodo di 12 mesi dalla data di consegna. Verranno sostituiti particolari da noi riconosciuti difettosi, purchè gli stessi non abbiano subito alterazioni durante il loro montaggio o siano stati impiegati in modo non conforme da parte dell'utente rispetto a quanto indicato nel ns manuale d'uso e manutenzione e/o in riferimento alle norme UNI-EN-ISO. I ns articoli vengono prodotti e controllati secondo le norme UNI-EN-ISO. In ogni caso la ns responsabilità è limitata alla sola sostituzione del particolare difettoso, declinando ogni altra responsabilità per qualunque conseguenza o danno derivante dalla fornitura dell'apparato completo. Non verrà riconosciuta alcuna spesa/onere aggiuntivo e/o supplementare per montaggi, smontaggi, spese di spedizione del materiale di ritorno per riparazione o sostituzione in garanzia, selezione ed eventuali acquisti di materiali sostitutivi e per fermi di produzione nonché per campagne richiami Vostri articoli. Per gli articoli da noi commercializzati e non di ns fabbricazione, la garanzia viene concessa limitatamente a quanto il fornitore/produttore dovesse imporci.

8. Le condizioni di pagamento indicate sulle ordinazioni, dopo l'avvenuta accettazione dell'ordine stesso, si intendono vincolanti per l'acquirente. Eventuali contestazioni sulle merci non potranno dar luogo a sospensioni, ritardi, differimenti, decurtazioni, ecc, di sorta nel pagamento delle ns fatture. Qualsiasi eventuale contestazione dovrà essere fatta, sotto pena di decadenza, in modo chiaro e preciso, per iscritto, entro il termine perentorio massimo di 8 giorni dalla data dell'arrivo e della consegna della merce, mediante l'invio diretto alla sede centrale di questa Società, nel suddetto termine perentorio, di apposito fax e/o e-mail. Sui ritardi o dilazioni di pagamento saranno conteggiati gli interessi nella misura massima prevista dal D.Lgs. 231/2002. In ogni caso le merci fornite si intendono integrale proprietà dell'acquirente solo al momento dell'avvenuto pagamento delle medesime e cioè in conformità agli articoli del C.C. 1523 e seguenti.

9. Per ogni controversia viene di comune accordo convenuta l'esclusiva COMPETENZA DEL FORO DI BRESCIA e sarà valida la Legge Italiana in vigore.

Ritiro del materiale presso i nostri magazzini

Nel caso del ritiro diretto del materiale presso i ns magazzini, da parte di Vs personale, non conosciuto dai ns magazzinieri, Vi chiediamo di fornire agli stessi idonea autorizzazione al ritiro (ad esempio copia ordine con sottoscritta indicazione del nominativo incaricato al ritiro).

Avvertenze ai sensi dell'art.30 D.Lgs 196/2003:

La presente per informare ed acquisire, in ottemperanza alla legge di riferimento, il consenso al trattamento dei dati personali del cliente e/o fornitore per scopi di tipo amministrativo e contabile volti a consentire il corretto sviluppo del rapporto professionale. I vostri dati saranno trattati con idonei strumenti informatici ed idonee disposizioni organizzative interne nel rispetto delle misure minime previste dalla legge e adottate dalla AEROTECNICA COLTRI S.p.A.

Timbro e firma per accettazione_____

Letto, approvato e consensualmente sottoscritto per specifica accettazione delle condizioni generali di vendita di cui ai punti 3 (riserva di proprietà), 4 (prezzi di vendita), 5 (limitazione di responsabilità), 6 (consegna – reclami), 7 (garanzia – applicazioni/esclusioni della garanzia), 8 (condizioni di pagamento), 9 (elezione del foro di competenza).

Timbro e firma per accettazione_____

General terms of sale

1. Supply of the devices and goods we produce is regulated by the undersigned "GENERAL TERMS OF SALE: THESE TERMS ARE ESSENTIAL AND CUSTOMERS OR BUYERS MUST EXPLICITLY STATE THAT THEY UNDERSTAND, APPROVE AND ACCEPT THEM IN FULL".
Any exceptions must be explicitly agreed on in writing.

2. All orders are accepted subject to approval on the part of our company. Partial or total cancellation of orders does not imply any civil liability on our part and cannot therefore give rise to any claims for damages. Orders are understood to be accepted only after approval and written confirmation. Not all shipments are packaged in the same way.

3. Delivered goods shall become the buyer's property only when the last instalment has been paid, capital, interest and expenses included. Should instalments exceeding one eighth of the price fail to be paid, the seller reserves the right to terminate the contract and request the return of the goods.
In this event all previously paid instalments shall be retained as compensation for use of the goods and as a penalty for defaulting. The return of the goods shall be managed by the seller at the buyer's expense.

4. Sales prices are as illustrated on the price list in force at the time the ordered goods are delivered. Our company therefore reserves the right to modify, at any time, price lists with regard to both the products we produce ourselves and those we market and for which the supplier may request unexpected price rises for reasons beyond our control. Price lists refer to goods delivered ex-works unless agreed otherwise in writing. VAT and any other present or future taxes shall be borne by the buyer. The price agreed in these terms of sale shall be accepted by the buyer and our company cannot therefore accept discounts or rounding down.

5. Delivery deadlines indicated on orders are indicative and do not bind our company. Deadlines shall be observed where stocks so allow. Delays in clearing orders shall not grant the buyer the right to cancel the order or request compensation for any cause and/or reason.

6. Goods are transported exclusively at the buyer's risk, even where goods are transported using our own vehicles or those belonging to third parties authorised by us. Transport costs shall be borne by the buyer in full unless agreed otherwise in writing. On receiving our packages the customer shall inspect them attentively and do so before signing the transport document for acceptance. Any non-compliance vis-à-vis the external aspect of the goods, damage and/or non-compliant weight, missing boxes etc. must be reported in writing on the transport document, a copy of which is returned to us. Claims concerning delivered goods cannot be accepted once 8 days have elapsed from their delivery and goods must not be returned for any reason without first obtaining our written permission.

7. The warranty on devices and goods produced by our company itself is limited to a period of 12 months as from the date of delivery. Parts we acknowledge to be faulty shall be replaced as long as they have not undergone alterations during assembly or been employed by the user in an improper manner with respect to the information contained in our use and maintenance manual and/or with reference to UNI-EN-ISO standards. Our articles are produced and quality-controlled as per UNI-EN-ISO standards. In any event our liability is limited solely to the replacement of the faulty part and our company cannot be held liable for any consequence or damage deriving from the supply of the complete system. No additional and/or supplementary expenses/costs shall be acknowledged for assembly, disassembly, return shipment of materials to be repaired or replaced under warranty, for the selection and any purchase of replacement goods or production downtimes nor for any recalls of your articles. For warranties on articles marketed but not actually manufactured by us we are bound by the limits imposed on us by the supplier/producer.

8. Terms of payment indicated on orders are intended, after acceptance of the order, as binding for the purchaser. Disputes shall not in any way authorise the buyer to suspend, delay, defer or curtail etc. payment of our invoices in any way. Any objections/criticism must be, in order to be valid, made clearly and precisely in writing, no more than 8 days after the date of arrival and delivery of the goods, by sending a fax or e-mail to this company's head office before such 8-day period expires. Interest shall be added to delayed or deferred payments as per Italian Law D.Lgs. 231/2002. In any event the purchaser shall only become the sole owner of the goods when the latter have been paid for in full, that is, in compliance with Italian Civil Code C.C. articles 1523 and amendments.

9. The agreed competent court for any disputes is the FORO DI BRESCIA and proceedings shall adhere to the Italian laws in force.

Collection of material from our warehouses

If material is to be collected directly from our warehouses by members of your personnel unknown to our warehouse staff, you are kindly required to provide them with suitable written authorisation (e.g. copy of order indicating name of person entrusted with collection).

Information regarding Art. 30 of Italian Law D.Lgs 196/2003:

This is to inform customers and/or suppliers and, in compliance with the relevant law, acquire their consent for treatment of personal data for administrative and accounting purposes and so allow business relations to be carried out correctly. Your data shall be processed using suitable IT tools and internal procedures that comply with the standards required by law and adopted by AEROTECNICA COLTRI S.p.A.

Stamp and signature for acceptance _____

Read, approved and undersigned for the specific acceptance of the general terms of sale, namely points 3 (reservation of title), 4 (sales prices), 5 (limitation of liability), 6 (delivery – complaints), 7 (warranty – applications/exclusions), 8 (terms of payment), 9 (choice of jurisdiction).

Stamp and signature for acceptance _____

Distinta - List			Pag.
GRUPPO POMPANTE - PUMPING GROUP			**6**
	Tavola	Drawing	Pag.
	Monoblocco	Crankcase Assembly	8
	Circuito olio	Oil circuit	10
	1° Stadio MCH-8	1st Stage MCH-8	12
	1° Stadio MCH-11-13-16-18	1st Stage MCH-11-13-16-18	14
	2° Stadio	2nd Stage	16
	3° Stadio	3rd Stage	18
	Circuito di Pressione	Pressure Circuit	20
	Circuito di pressione (Tropical - Tropical Plus)	Pressure circuit (Tropical - Tropical Plus)	22
	Staffe di fissaggio	Brackets fixing	24
	Staffe di fissaggio (Tropical - Tropical Plus)	Brackets fixing (Tropical - Tropical Plus)	26
	Separatore di condensa	Condensate separator	28
	Filtro carboni attivi / Setaccio molecolare	Active carbon filter / Molecular sieve	30
	Hyperfilter carboni attivi / Setaccio molecolare	Active carbon hyperfilter / Molecular sieve	32
	Valvola di sicurezza	Safety valve	34
	Valvola mantenimento pressione	Pressure maintenance valve	34
	Circuito di filtrazione (Standard - MiniTech)	Filtering circuit (Standard - MiniTech)	36

Distinta - List			Pag.
TELAIO - FRAME			**39**
	Tavola	Drawing	Pag.
	Livello olio	Oil level	40
	Livello olio Mark1 - Mark2	Oil level Mark1 - Mark2	42
	Circuito di filtrazione (Tech)	Filtering circuit (Tech)	44
	Circuito di filtrazione (Compact - Compact M)	Filtering circuit (Compact - Compact M)	46
	Circuito di filtrazione (Compact Evo)	Filtering circuit (Compact Evo)	48
	Circuito di filtrazione (Mini Silent)	Filtering circuit (Mini Silent)	50
	Circuito di filtrazione (Super Silent Evo)	Filtering circuit (Super Silent Evo)	52
	Circuito di filtrazione (MCH-26-32/ET Compact)	Filtering circuit (MCH-26-32/ET Compact)	54
	Circuito di filtrazione (Tech: Tropical-Tropical Plus)	Filtering circuit (Tech: Tropical-Tropical Plus)	56
	Circuito di filtrazione (Super Silent Evo: Tropical)	Filtering circuit (Super Silent Evo: Tropical)	58
	Circuito di filtrazione (Super Silent Evo: Tropical Plus)	Filtering circuit (Super Silent Evo: Tropical Plus)	60
	Circuito di filtrazione (Mark1)	Filtering circuit (Mark1)	62
	Circuito di filtrazione (Mark2)	Filtering circuit (Mark2)	64
	Scarico condensa (Standard - Tech - MiniTech)	Condensate discharge (Standard - Tech - MiniTech)	66
	Scarico condensa (Compact-Compact M-Compact Evo)	Condensate discharge (Compact-Compact M-Compact Evo)	68
	Scarico condensa (Mini Silent)	Condensate discharge (Mini Silent)	70
	Scarico condensa (Super Silent Evo)	Condensate discharge (Super Silent Evo)	72
	Scarico condensa (MCH-26-32/ET Compact)	Condensate discharge (MCH-26-32/ET Compact)	74
	Scarico condensa (Mark1-Mark2)	Condensate discharge (Mark1-Mark2)	76
	Telaio (Standard SH)	Frame (Standard SH)	78
	Telaio (Standard DL-DY)	Frame (Standard DL-DY)	80
	Telaio (Standard EM-ET)	Frame (Standard EM-ET)	82
	Telaio (Tech)	Frame (Tech)	84
	Telaio (MiniTech SH)	Frame (MiniTech SH)	86
	Telaio (MiniTech DL-DY)	Frame (MiniTech DL-DY)	88
	Telaio (Compact)	Frame (Compact)	90
	Telaio (26-32 Compact)	Frame (26-32 Compact)	92
	Telaio (Compact Evo)	Frame (Compact Evo)	94
	Telaio (Compact M)	Frame (Compact M)	96
	Telaio (Super Silent Evo)	Frame (Super Silent Evo)	98
	Telaio (Mini Silent)	Frame (Mini Silent)	100
	Telaio (Mark1-Mark2)	Frame (Mark1-Mark2)	102
	Targhette di sicurezza	Safety info label	104

Distinta - List			Pag.
MOTORE - ENGINE			**107**
	Tavola	Drawing	Pag.
	Puleggia motore/Cinghia di trasmission	Engine pulley/Transmission belt	108

Accessori - Accessories			
	Tavola	Drawing	Pag.
	Attacchi per ricarica bombole	Bottle refill connectors	112

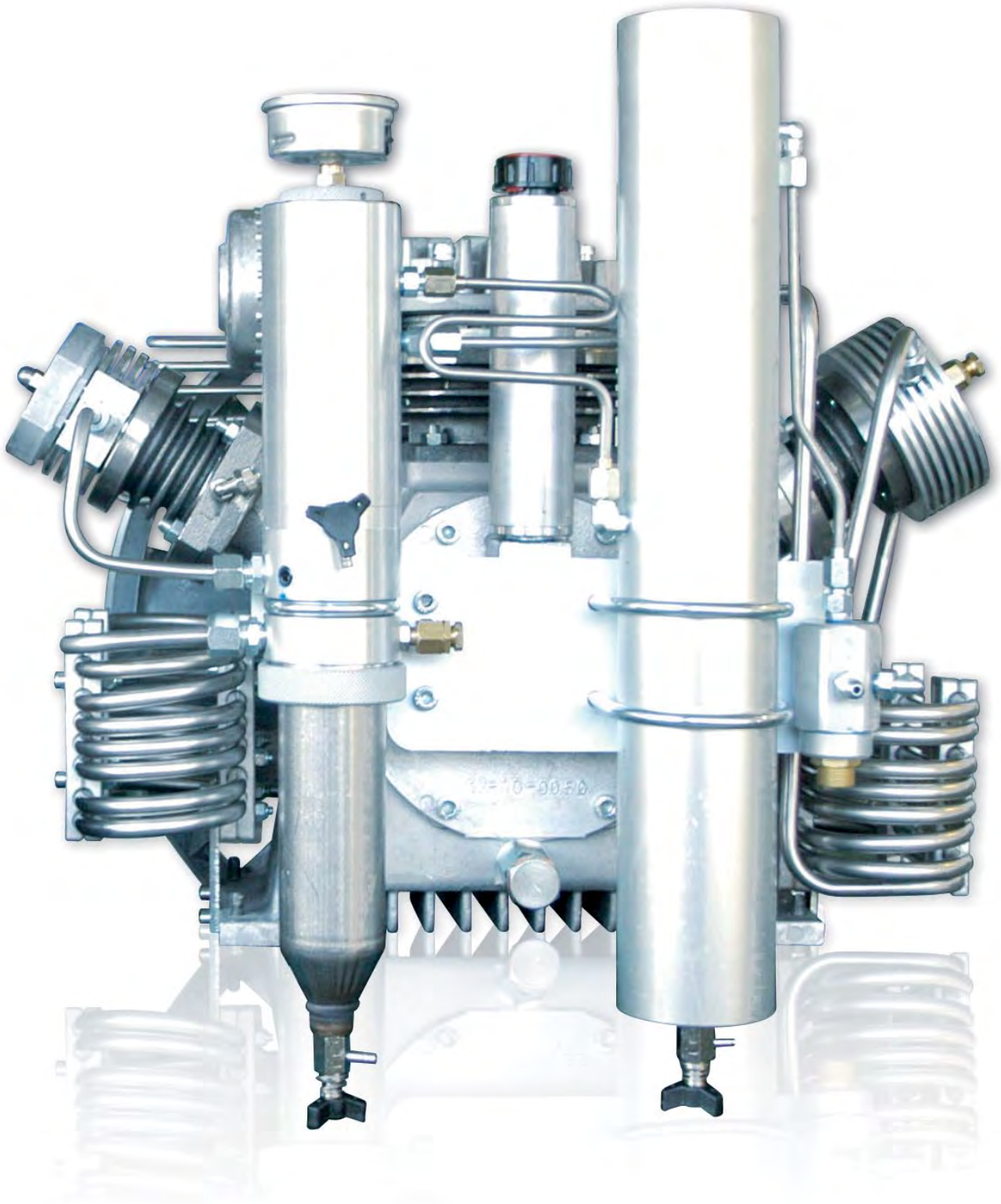

Distinta List	Modello Model	Codice Code
GRUPPO POMPANTE PUMPING GROUP	MCH-8	-
	MCH-11	-
	MCH-13	-
	MCH-16	-
	MCH-18	-
	MCH-8 TROPICAL	-
	MCH-11 TROPICAL	-
	MCH-13 TROPICAL	-
	MCH-16 TROPICAL PLUS	-
	MCH-18 TROPICAL PLUS	-
	MCH-8 STANDARD	-
	MCH-11 STANDARD	-
	MCH-13 STANDARD	-
	MCH-16 STANDARD	-
	MCH-18 STANDARD	-
	MCH-8 STANDARD TROPICAL	-
	MCH-11 STANDARD TROPICAL	-
	MCH-13 STANDARD TROPICAL	-
	MCH-16 STANDARD TROPICAL PLUS	-
	MCH-18 STANDARD TROPICAL PLUS	-

Tavola	Drawing	Pag.
Monoblocco	Crankcase Assembly	8
Circuito olio	Oil circuit	10
1° Stadio MCH-8	1st Stage MCH-8	12
1° Stadio MCH-11-13-16-18	1st Stage MCH-11-13-16-18	14
2° Stadio	2nd Stage	16
3° Stadio	3rd Stage	18
Circuito di Pressione	Pressure Circuit	20
Circuito di pressione (Tropical - Tropical Plus)	Pressure circuit (Tropical - Tropical Plus)	22
Staffe di fissaggio	Brackets fixing	24
Staffe di fissaggio (Tropical - Tropical Plus)	Brackets fixing (Tropical - Tropical Plus)	26
Separatore di condensa	Condensate separator	28
Filtro carboni attivi / Setaccio molecolare	Active carbon filter / Molecular sieve	30
Hyperfilter carboni attivi / Setaccio molecolare	Active carbon hyperfilter / Molecular sieve	32
Valvola di sicurezza	Safety valve	34
Valvola mantenimento pressione	Pressure maintenance valve	34
Circuito di filtrazione (Standard - MiniTech)	Filtering circuit (Standard - MiniTech)	36

MONOBLOCCO - CRANKCASE ASSEMBLY

Rif. Pos.	Q.tà Q.ty	Codice Code	Descrizione	Description
KIT1a	1	13-00-0050/R	KIT FLANGIA LATO FILTRI MCH13/16	FILTER SIDE FLANGE MCH13/16 KIT
1.1a	1	13-00-0050	FLANGIA LATO FILTRI MCH13/16	FILTER SIDE FLANGE MCH13/16
1.2	1	13-00-0062	O-RING 2562 NBR 70 FLANGIA	FLANGE O-RING 2562
1.3	1	13-00-0042	CUSCINETTO RULLI FLANGIA NU305	FLANGE ROLLER BEARING NU305
1.4	1	13-00-0055	ANELLO ELASTICO SEEGER J 62 DIN 472	SEEGER RETAINING RING J 62
1.5	1	13-01-0042/N	FLANGIA MEZZALUNA DIAM. 140X80 SP. 10/10	HALF MOON FLANGE 140X80 SP. 10/10 MCH13/16
1.6	6	13-00-0048	VITE 8X25 T.C.E. ZINC. DIN 912	SCREW 8X25 T.C.E. ZINC. DIN 912
1.7	2	13-00-0137	DADO ZINCATO AUTOBLOC. M6 ALTO	SELF LOCKING NUT M6 HIGH
1.8	2	13-00-0067	VITE 6X35 T.C.E. ZINC. DIN 912	SCREW 6X35 T.C.E. ZINC. DIN 912
KIT1b	1	13-00-0050/TR/R	KIT FLANGIA LATO FILTRI MCH13/16 PER TROPICAL	FILTER SIDE FLANGE MCH13/16 FOR TROPICAL KIT
1.1b	1	13-00-0050/TR	FLANGIA LATO FILTRI MCH13/16 PER TROPICAL	FILTER SIDE FLANGE MCH13/16 FOR TROPICAL
1.2	1	13-00-0062	O-RING 2562 NBR 70 FLANGIA	FLANGE O-RING 2562
1.3	1	13-00-0042	CUSCINETTO RULLI FLANGIA NU305	FLANGE ROLLER BEARING NU305
1.4	1	13-00-0055	ANELLO ELASTICO SEEGER J 62 DIN 472	SEEGER RETAINING RING J 62
1.5	1	13-01-0042/N	FLANGIA MEZZALUNA DIAM. 140X80 SP. 10/10	HALF MOON FLANGE 140X80 SP. 10/10 MCH13/16
1.6	4	13-00-0048	VITE 8X25 T.C.E. ZINC. DIN 912	SCREW 8X25 T.C.E. ZINC. DIN 912
1.7	2	13-00-0137	DADO ZINCATO AUTOBLOC. M6 ALTO	SELF LOCKING NUT M6 HIGH
1.8	2	13-00-0067	VITE 6X35 T.C.E. ZINC. DIN 912	SCREW 6X35 T.C.E. ZINC. DIN 912
1.9	2	13-00-0075	VITE T.C.E. ZINCATA 8x30	SCREW T.C.E. ZINCATA 8x30
KIT2	1	13-00-0098/R	KIT COLLO D'OCA MCH13/16	CRANKSHAFT MCH13/16 KIT
2.1	1	13-00-0104	VITE T.C.E. ZINCATA 8x65	8X65 TCE SCREW
2.2	1	13-00-0101	DADO ZINCATO AUTOBLOC. M8 ALTO	8MM SELF-LOCKING NUT
2.3	1	13-00-0100	CONTRAPPESO MCH13	COUNTERWEIGHT
2.4	3	13-00-0042	CUSCINETTO RULLI FLANGIA NU305ECP(25X62X17)	FLANGE ROLLER BEARING NU305ECP(25X62X17)
2.5	1	13-00-0098	COLLO D'OCA MCH13/16	CRANKSHAFT MCH13/16
2.6	1	13-00-0099	CHIAVETTA MM.8X7X25	KEY MM.8X7X25
2.7	1	13-00-0072	ANELLO ELASTICO SEEGER A30 30x1,5	SEEGER RETAINING RING A30 30x1,5
2.8	1	RON10ZG	RONDELLA PIANA M10 ZINCATA	WASHER M10
2.9	1	13-00-0081	VITE 10X40 T.C.E. ZINC.	SCREW 10X40 T.C.E. ZINC.
KIT3a	1	13-00-0001/R	KIT MONOBLOCCO MCH13-16	CRANKCASE MCH13-16
3.1	1	13-00-0001	MONOBLOCCO MCH13-16	CRANKCASE MCH13-16
3.2	1	6-00-029	TAPPO SFIATO OLIO MCH6 1/8 NPT 7/16	OIL PURGE CAP MCH6 1/8 NPT 7/16
3.3	1	13-00-0174	Racc. 1/8 NPT 7/16 Tubo 6 mm	STRAIGHT 1/8 PIPE FITTING 6
KIT3b	1	05-00-001/R	KIT MONOBLOCCO MCH5 CNG	KIT CRANKCASE MCH5 CNG
3.1	1	13-00-0001	MONOBLOCCO MCH5 CNG	CRANKCASE MCH-5 CNG
3.2	1	6-00-029	TAPPO SFIATO OLIO MCH6 1/8 NPT 7/16	OIL PURGE CAP MCH6 1/8 NPT 7/16
3.3	1	13-00-0174	Racc. 1/8 NPT 7/16 Tubo 6 mm	STRAIGHT 1/8 PIPE FITTING 6
KIT4a	1	13-00-0071/R	KIT FLANGIA LATO VENTOLA MCH 13/16	FAN SIDE FLANGE MCH13-16 KIT
4.1a	1	13-00-0071	FLANGIA LATO VENTOLA MCH 13/16	FAN SIDE FLANGE MCH13-16
4.2	1	13-00-0070/N	CUSCINETTO A RULLI NUP 206 C3	ROLLER BEARING NUP 206 C3
4.3	1	13-00-0062	O-RING 2562 NBR 70 FLANGIA	FLANGE O-RING 2562
4.4	1	13-00-0055	ANELLO ELASTICO SEEGER J 62 DIN 472	SEEGER RETAINING RING J 62
4.5	4	13-00-0048	VITE 8X25 T.C.E. ZINC. DIN 912	SCREW 8X25 T.C.E. ZINC. DIN 912
4.6	1	13-00-0073	PARAOLIO 30X48X8	OIL SPLASH GUARD 30-48-8
4.7	2	13-00-0075	VITE T.C.E. ZINCATA 8x30	SCREW T.C.E. ZINCATA 8x30
KIT4b	1	13-00-0071/TR/R	KIT FLANGIA LATO VENTOLA MCH 13/16 X TROPICAL PLUS	FAN SIDE FLANGE MCH13-16 TROPICAL PLUS KIT
4.1b	1	13-00-0071/TR	FLANGIA LATO VENTOLA MCH 13/16 X TROPICAL PLUS	FAN SIDE FLANGE MCH13-16 TROPICAL
4.2	1	13-00-0070/N	CUSCINETTO A RULLI NUP 206 C3	ROLLER BEARING NUP 206 C3
4.3	1	13-00-0062	O-RING 2562 NBR 70 FLANGIA	FLANGE O-RING 2562
4.4	1	13-00-0055	ANELLO ELASTICO SEEGER J 62 DIN 472	SEEGER RETAINING RING J 62
4.5	4	13-00-0048	VITE 8X25 T.C.E. ZINC. DIN 912	SCREW 8X25 T.C.E. ZINC. DIN 912
4.6	1	13-00-0073	PARAOLIO 30X48X8	OIL SPLASH GUARD 30-48-8
4.7	2	13-00-0075	VITE T.C.E. ZINCATA 8x30	SCREW T.C.E. ZINCATA 8x30
KIT5	1	13-00-0077/R	KIT VENTOLA DI RAFFREDDAMENTO MCH13/16	COOLING FAN WHEEL MCH13-16 KIT
5.1	1	13-00-0074	MOZZO PORTAVENTOLA MCH13/16	FAN-HOLDING HUB MCH13/16
5.2	1	13-00-0077	VENTOLA DI RAFFREDDAMENTO MCH13/16	COOLING FAN WHEEL MCH13-16
5.3	1	13-00-0082	FLANGIA VENTOLA MCH13/16	COOLING FAN FLANGE MCH13/16
5.4	1	VITE1045Z	VITE T.C.E. ZINC. 10X45	SCREW 10X45 T.C.E. ZINC.
5.5	4	13-00-0080	VITE 12X35 T.C.E. ZINC. DIN912	SCREW 12X35 T.C.E. ZINC. DIN912
5.6	1	RON10ZG	RONDELLA PIANA M10 ZINCATA	WASHER M10
5.7	4	13-00-0079	RONDELLA PIANA M12 ZINCATA (12,5x24x2,5) DIN 125 UNI 6592	WASHER M12
KIT6	1	13-00-0105/R	BIELLA SECONDO STADIO MCH13/16	2ND STAGE CON-ROD ASS.BLY MCH13/16
6.1	1	CUSC/F2020	CUSCINETTO/ASTUCCIO A RULLI	BEARING ROLLER
6.2	1	13-00-0126	ANELLO TEMPRATO IR 42x47x15,1 INTERNO BIELLA	HARDENED RING IR 42x47x15,1
6.3	1	13-00-0128	GABBIA A RULLI 35x42x16-AH	BEARING ROLLER
KIT7	2	13-01-0107/R	BIELLA PRIMO/TERZO STADIO MCH13/16	1ST/3RD STAGE CON-ROD ASS.BLY
7.1	2	CUSC/F2020	CUSCINETTO/ASTUCCIO A RULLI	BEARING ROLLER
7.2	2	13-00-0126	ANELLO TEMPRATO IR 42x47x15,1 INTERNO BIELLA	HARDENED RING IR 42x47x15,1
7.3	2	13-00-0128	GABBIA A RULLI 35x42x16-AH	BEARING ROLLER
8	2	13-00-0106	RALLA AS 3552	SPACER

MONOBLOCCO - CRANKCASE ASSEMBLY

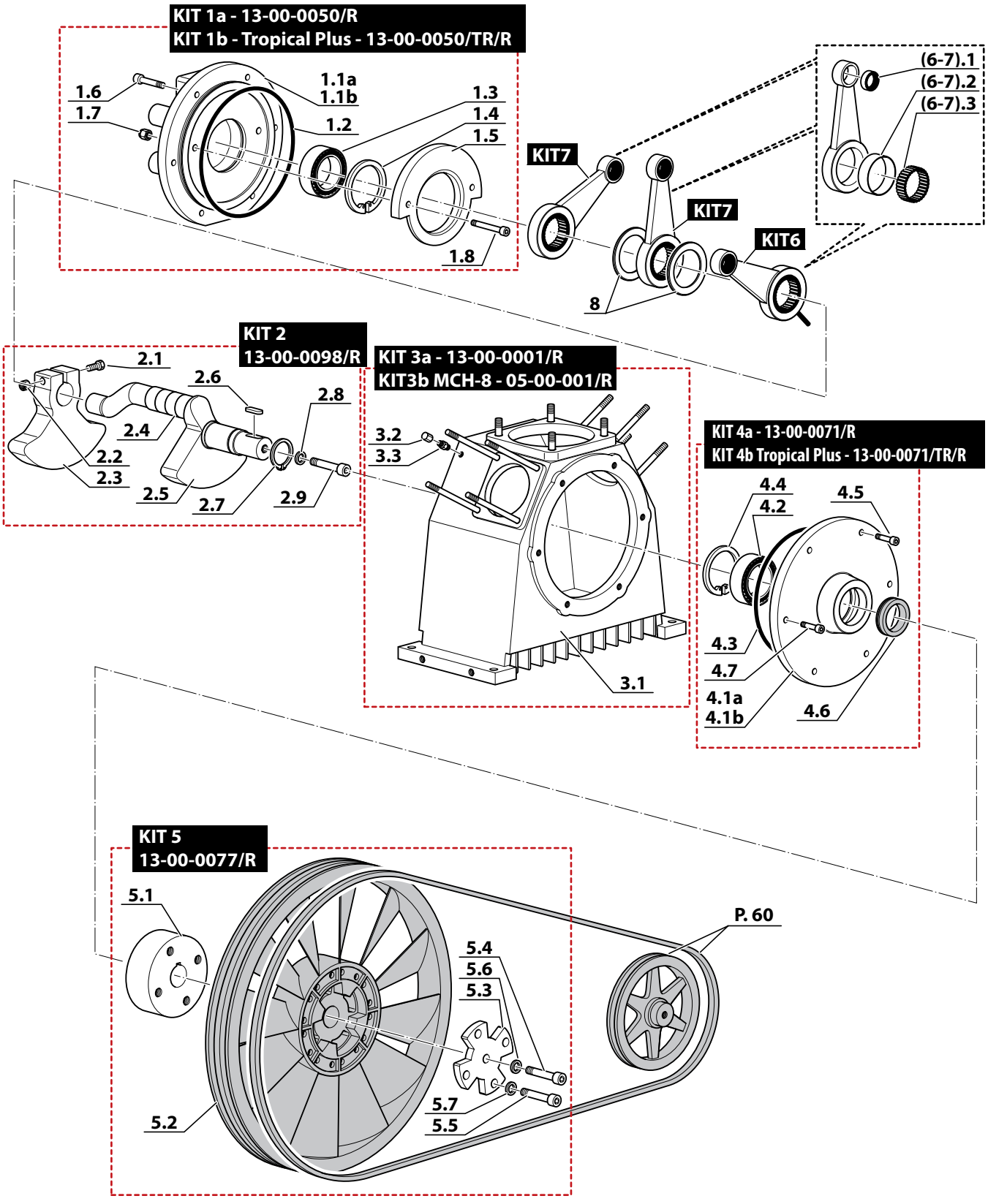

CIRCUITO OLIO - OIL CIRCUIT

	Rif. Pos.	Q.tà Q.ty	Codice Code	Descrizione	Description
1	1.1	2	13-00-0021	RACCORDO 90° 1/8 NPT	FITTING 90° 1/8 NPT
	1.2	1	13-00-0064	TUBO CONTROLLO LIVELLO OLIO	OIL LEVEL CHECK TUBE MCH13/16
	1.3	1	13-00-0052	PROLUNGA SCARICO OLIO	FITTING FOR OIL DISCHARGE
	1.4	1	13-00-0053	GUARNIZIONE RAME 21,5x28x1,5	COPPER GASKET 21,5x28x1,5
	1.5	1	13-00-0063	TAPPO SCARICO OLIO	OIL DRAIN PLUG
	1.6	1	13-00-0090	TAPPO 1/2 (ROSSO) CARICO OLIO CON SFIATO MCH13/16	OIL FILLING CAP 1/2 (RED) MCH13/16 WITH BREATHER
	1.7	1	13-00-0065A	RACCORDO SUPERIORE TUBO CARICO OLIO MCH13/16	HIGHER OIL CHARGE TUBE FITTING MCH13/16
	1.8	1	13-00-0065	RACCORDO INFERIORE TUBO CARICO OLIO MCH13/16	LOWER OIL CHARGE TUBE FITTING MCH13/16
	1.9	1	13-00-0076	TUBO CARICO OLIO MCH13-16	OIL FILLING TUBE MCH13/16
	1.10	2	13-00-0061	O-RING 3137 NBR70 (34.60x2.62) CARICO OLIO	O-RING TUBE OIL CHARGE NBR 70 (34,6X2,62)
	1.11	1	13-00-0063/NPT	TAPPO OIL ALERT 1/2-14 NPT - MCH-13/16	OIL ALERT 1/2-14 NPT - MCH-13/16 PLUG
2	2.1	1	13-00-0090	TAPPO 1/2 (ROSSO) CARICO OLIO CON SFIATO MCH13/16	OIL FILLING CAP 1/2 (RED) MCH13/16 WITH BREATHER
	2.2	1	13-00-0065A	RACCORDO SUPERIORE TUBO CARICO OLIO MCH13/16	HIGHER OIL CHARGE TUBE FITTING MCH13/16
	2.3	1	13-00-0065	RACCORDO INFERIORE TUBO CARICO OLIO MCH13/16	LOWER OIL CHARGE TUBE FITTING MCH13/16
	2.4	1	13-00-0076	TUBO CARICO OLIO MCH13-16	OIL FILLING TUBE MCH13/16
	2.5	1	13-04-0231	TAPPO 1/2" SCARICO OLIO	OIL DRAIN PLUG 1/2"
	2.6	0,3	TUBRILSAN6X4	TUBO RILSAN 6x4	RILSAN HOSE 6x4
	2.7	2	13-00-0061	O-RING 3137 NBR70 (34.60x2.62) CARICO OLIO	O-RING TUBE OIL CHARGE NBR 70 (34,6X2,62)
	2.8	1	13-00-0021	RACCORDO 90° 1/8 NPT	FITTING 90° 1/8 NPT
	2.9	1	13-00-0064	TUBO CONTROLLO LIVELLO OLIO	OIL LEVEL CHECK TUBE MCH13/16
	2.10	1	13-00-0144	RACCORDO 90° 1/8 - TUBO 6mm	FITTING 90° 1/8 - TUBO 6mm
	2.11	1	13-00-0035	RACCORDO DIRITTO 1/4 TUBO 8mm	STRAIGHT FITTING 1/4 TUBE 8MM
	2.12	1	13-03-0025/TR	TUBO INOX 6x1 MCH-13-16 TROPICAL PLUS SCARICO OLIO	SS TUBE 6x1 MCH-13-16 TROPICAL PLUS OIL DRAIN
	2.13	1	13-00-0025E	RACCORDO 1/4 G -TUBO 6mm DIRITTO ERMETO	FITTING 1/4 G -PIPE 6mm ERMETO
	2.14	1	VITE0512Z	VITE T.C.E. ZINC. 5X12	SCREW T.C.E. ZINC. 5X12
	2.15	1	36-06-004	TAPPO FILTRO OLIO MCH36	MCH-36 OIL FILTER PLUG
	2.16	1	13-00-0061	O-RING 3137 NBR70 (34.60x2.62)	O-RING 3137 NBR70 (34.60x2.62)
	2.17	1	36-06-006	FILTRO OLIO MCH36	OIL FILTER MCH36
	2.18	1	36-06-007	CARTER FILTRO OLIO MCH36	OIL FILTER CARTER
	2.19	1	RACC25301/41/8	RACCORDO 2530 1/4 1/8	FITTING 2530 1/4 1/8
	2.20	1	36-06-009	POMPA OLIO MCH36	OIL PUMP MCH36
	2.21	4	36-06-010	VITE TCEIZN M5x50-8.8 MCH36	TCEIZN M5x50-8.8 MCH36 SCREW
	2.22	1	36-06-019/T	GIUNTO POMPA OLIO MCH13/16 PER TROPICAL	OIL PUMP COUPLING MCH13/16 TROPICAL
	2.23	1	SPINA/3,5x26	SPINA ELASTICA 3,5x26	PIN 3,5x26
	2.24	1	RIDUZIONE/E2151004	RIDUZIONE MASCHIO FEMMINA CIL. E2151004 1/2 1/4	M-F 1/2 1/4 REDUCTION
	2.25	1	13-03-0024/TR	TUBO INOX 8x1 MCH-13-16 TROPICAL PLUS RACC.SCAR. OLIO-POMPA	SS TUBE 8x1 MCH-13-16 TROPICAL PLUS DRAIN FITTING-OIL PUMP
	2.26	1	13-00-0063/NPT	TAPPO OIL ALERT 1/2-14 NPT - MCH-13/16	OIL ALERT 1/2-14 NPT - MCH-13/16 PLUG
	2.27	1	RACC20701/2	RACCORDO A T FXFXM 1/2	T FITTING FXFXM 1/2
	3	1	SC000334	SENSORE LIVELLO OLIO	OIL LEVEL SWITCH

CIRCUITO OLIO - OIL CIRCUIT

Model: Standard - Tech - Minitech

1

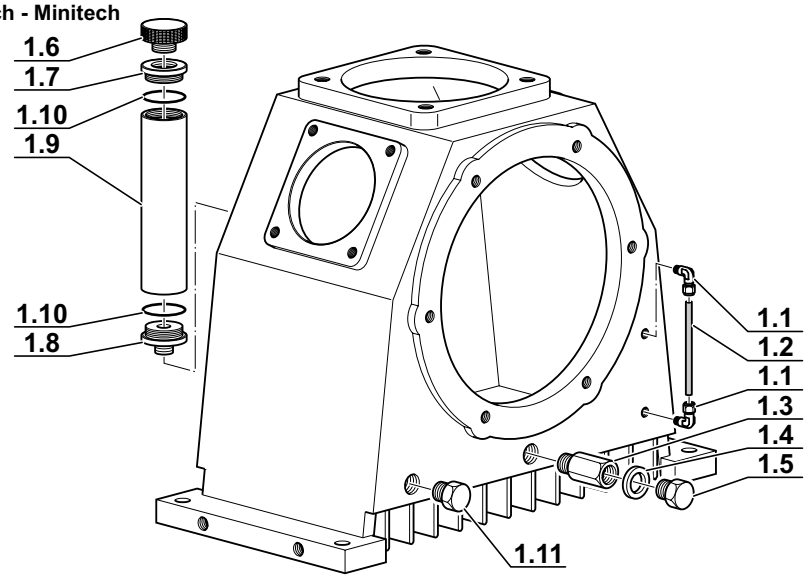

Model: Tropical Plus

2

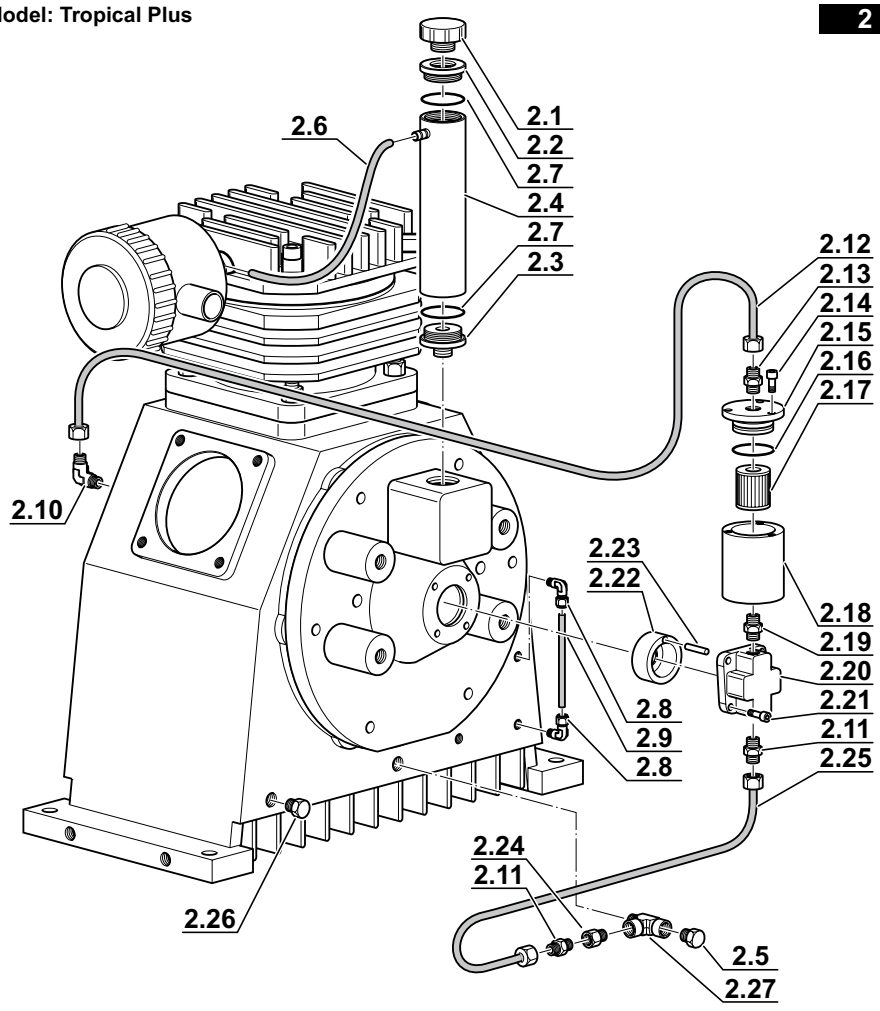

Oil level switch

OPTIONAL

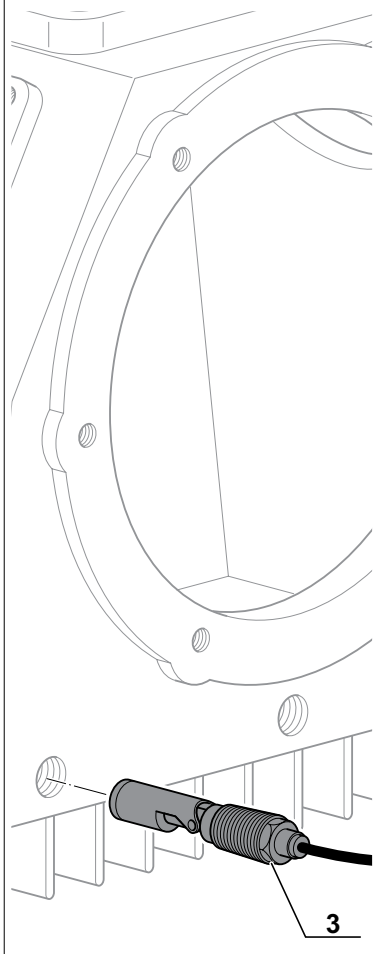

1° STADIO MCH-8 - 1st STAGE MCH-8

Rif. Pos.	Q.tà Q.ty	Codice Code	Descrizione	Description
KIT1	1	SC000360	FILTRO ASPIRAZIONE COMPLETO	AIR INTAKE FILTER COMPLETE
1.1	1	SC000345	CARTUCCIA FILTRO ASPIRAZIONE	CARTRIDGE AIR INTAKE FILTER
KIT2	1	08-01-006/R	KIT COPERCHIO TESTA 1° ST. MCH-8	1ST STAGE HEAD COVER MCH-8 KIT
2.1	1	05-01-006	COPERCHIO TESTA 1° ST. MCH5 CNG	1ST STAGE HEAD COVER MCH-5
2.2	1	13-00-0012	RACCORDO DIRITTO 1/4 TUBO 10mm	STRAIGHT FITTING 1/4 TUBE 10M.
KIT3	1	05-01-05/R	KIT VALVOLA A LAMELLE 1° ST. MCH5 CNG	1ST STAGE REED VALVE MCH-5 KIT
3.1	1	05-01-05	VALVOLA A LAMELLE 1° ST. MCH5 CNG	1ST STAGE REED VALVE MCH-5
3.2	1	05-02-016	GUARNIZIONE GRAFITATA TESTA 1° ST. MCH5 CNG	1ST STAGE GASKET HEAD MCH-5
3.3	1	05-02-015	GUARNIZIONE GRAFITATA CIL. 1° ST. MCH5 CNG	1ST STAGE GASKET CYLINDER MCH-5
KIT4	1	05-01-002/R	KIT CILINDRO 1° ST. MCH5 CNG	1ST STAGE CYLINDER MCH-5 KIT
4.1	1	05-01-002	CILINDRO 1° ST. MCH5 CNG	1ST STAGE CYLINDER MCH-5
4.2	1	13-00-0015	O-RING 2275 NBR70 (69.57x1.78)	3°RD STAGE CYLINDER O-RING 2275 NBR 70 69,57x1,78
KIT5	1	05-01-010/R	KIT PISTONE 1° STADIO MCH5 DIAM. 60 P6052	1st STAGE PISTON MCH-5 D.60mm KIT
5.1	1	05-01-010	PISTONE 1° STADIO MCH5 DIAM. 60 P6052	1st STAGE PISTON MCH-5 D.60mm
5.2	1	05-01-0111	SPINOTTO 1° STADIO MCH5 B 20X13X48	1° STAGE PISTON PIN MCH-5 B20X13X48
5.3	2	13-00-0110	SEEGER/ANELLO ELAST.SPIN.PIST.	SEEGER RETAINING RING
5.4	4	05-01-0113	SERIE FASCE ELASTICHE D.60mm 1° ST. MCH-5	N°3 SERIES SEGMENTS 1ST STAGE MCH-5 D.60mm
6	4	13-00-0067	VITE 6X35 T.C.E. ZINC. DIN 912	SCREW 6X35 T.C.E. ZINC. DIN 912
7	4	RON6Z	RONDELLA PIANA ZINC. M6	FLAT WASHER M6
8	4	13-00-0018	DADO ZINCATO M8 MEDIO	MIDDLE NUT M8 ZINC.
9	4	13-01-0008	TIRANTE PRIMO STADIO MCH13/16	FIRST STAGE TIE ROD MCH13/16
10	4	VITE0820	VITE T.C.E. ZINC. 8X20	T.C.E. ZINC. 8X20 SCREW
11	1	05-01-011	PIASTRA COPERTURA FORO DIAM.70,5 MCH-5 , BOOSTER	LOCKING PLATE HOLE D.70,5 MCH-5

1° STADIO MCH-8 - 1st STAGE MCH-8

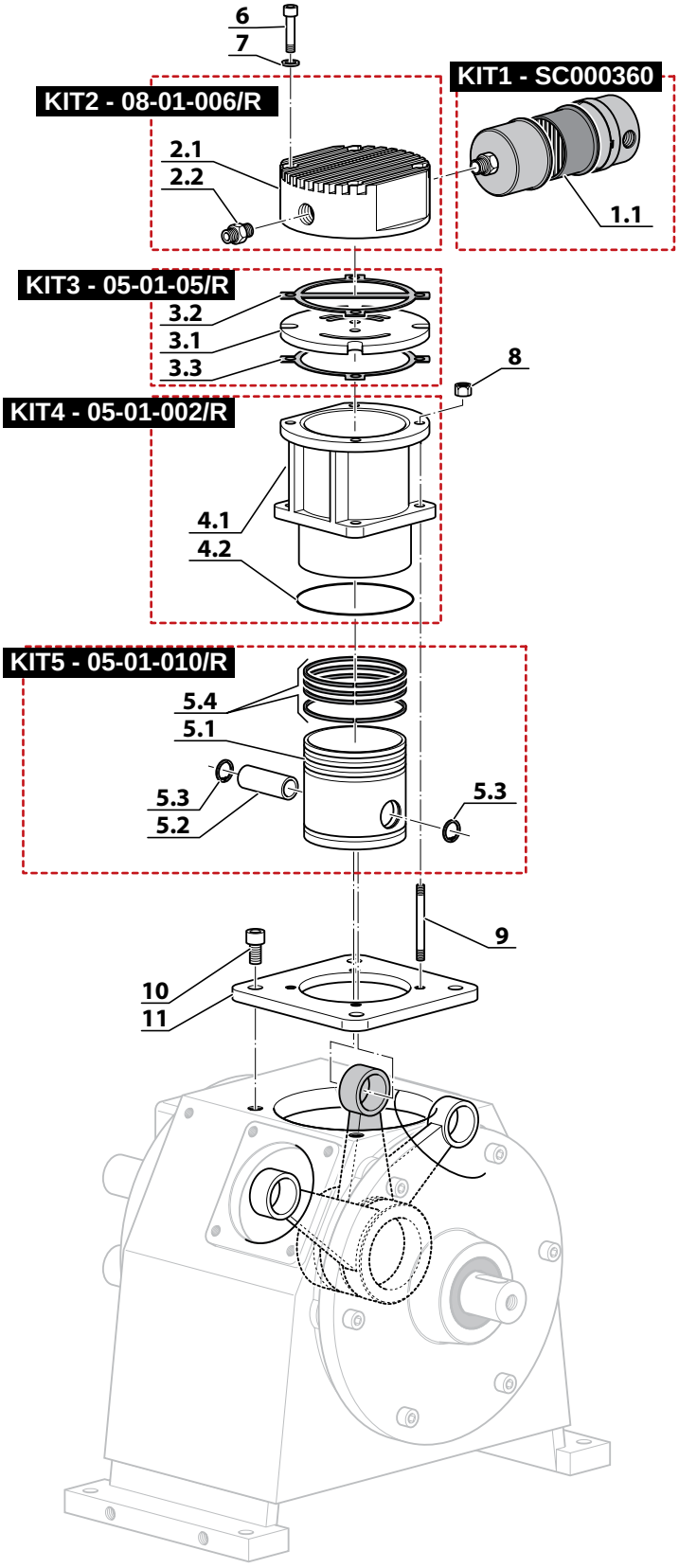

1° STADIO MCH-11-13-16-18 - 1st STAGE MCH-11-13-16-18

Rif. Pos.	Q.tà Q.ty	Codice Code	Descrizione	Description
KIT1	1	13-01-0006/R	KIT COPERCHIO TESTA 1° STADIO	1ST STAGE HEAD COVER MCH13/16 KIT
1.1	1	13-01-0006	COPERCHIO TESTA 1° STADIO	1ST STAGE HEAD COVER MCH13/16
1.2	1	13-00-0012	RACCORDO DIRITTO 1/4 TUBO 10mm	STRAIGHT FITTING 1/4 TUBE 10M.
1.3	1	13-01-0013	O-RING 3137 NBR70 (34.60x2.62)	O-R SUCTION FILTER 3137 NBR 70 (34,60X2,62)
1.4	1	13-01-0026	MOLLA FILTRO ASPIRAZIONE	INTAKE FILTER SPRING
1.5	1	13-01-0011	O-RING 3281 NBR70 COPERC.FILTRO ASPIRAZIONE	INTAKE FILTER COVER O-RING MCH13/16
1.6	1	SC000370	CART. FILTRO ASP. MCH13/16	SUCTION FILTER CARTRIDGE MCH13/16
1.7	1	13-01-0041	COPERCHIO FILTRO ASPIRAZIONE	INTAKE FILTER COVER MCH13/16
KIT2a	1	13-01-0003/R	KIT TESTA 1° STADIO 88mm	1°ST STAGE CYLINDER HEAD 88mm KIT
2.1	1	13-01-0005	GUARNIZ.1° ST.(SAGOM) MCH13/16	1°ST STAGE GASKET MCH/13 UPPER HEAD
2.2	1	13-01-0004	VALVOLA PRIMO STADIO A LAMELLE MCH13/16	1ST STAGE REED VALVE
2.3a	1	13-01-0003	GUARNIZIONE 1° STADIO D.88mm	1ST STAGE 88MM. GASKET UNDER HEAD
KIT2b	1	16-01-0003/R	KIT TESTA 1° STADIO 97mm	1°ST STAGE CYLINDER HEAD 97mm KIT
2.1	1	13-01-0005	GUARNIZ.1° ST.(SAGOM) MCH13/16	1°ST STAGE GASKET MCH/13 UPPER HEAD
2.2	1	13-01-0004	VALVOLA PRIMO STADIO A LAMELLE MCH13/16	1ST STAGE REED VALVE
2.3b	1	16-01-0003	GUARNIZIONE 1° STADIO D.97mm	GASKET FIRST STAGE D. 97mm MCH16 UNDER HEAD
KIT3a	1	13-01-0117/R	KIT PISTONE 1° MCH-13	1ST STAGE MCH13 KIT
3.1a	1	13-01-0117	PISTONE PRIMO STADIO DIAM.88mm	1ST STAGE 88MM. PISTON MCH13
3.2a	4	13-01-0118	SERIE FASCE ELASTICHE D.88mm	PISTON RINGS D. 88mm 1STA STAGE MCH13
3.3a	1	13-01-0116	SPINOTTO PRIMO STADIO D.88mm	FIRST STAGE 88MM PIN
3.4	2	13-00-0110	SEEGER/ANELLO ELAST.SPIN.PIST.	SEEGER RETAINING RING
KIT3b	1	16-01-0117/R	KIT PISTONE MCH-16	1ST STAGE MCH16 KIT
3.1b	1	16-01-0117	PISTONE PRIMO STADIO DIAM.95mm	1ST STAGE PISTON D.95mm MCH16
3.2b	4	16-01-0118	SERIE FASCE ELASTICHE D.95mm	PISTON RINGS DIA 95mm FIRST STAGE MCH16
3.3b	1	16-01-0116	SPINOTTO PRIMO STADIO D.95mm	FIRST STAGE 95MM PIN
3.4	2	13-00-0110	SEEGER/ANELLO ELAST.SPIN.PIST.	SEEGER RETAINING RING
KIT4a	1	13-01-0002/R	KIT CILINDRO 1^STADIO DIAM 88mm MCH-13	1ST STAGE CYLINDER 88mm. MCH13 KIT
4.1a	1	13-01-0002	CILINDRO 1^STADIO DIAM 88mm MCH-13	1ST STAGE CYLINDER 88mm. MCH13
4.2	1	13-01-0007	O-RING 2400 NBR70(101.34x1.78)	1°ST STAGE CYLINDER O-RING 2400 NBR 70 101,34x1,78
KIT4b	1	16-01-0002/R	KIT CILINDRO 1^STADIO DIAM. 95mm MCH-16	1ST STAGE CYLINDER D.95mm MCH16 KIT
4.1b	1	16-01-0002	CILINDRO 1^STADIO DIAM. 95mm MCH-16	1ST STAGE CYLINDER D.95mm MCH16
4.2	1	13-01-0007	O-RING 2400 NBR70(101.34x1.78)	1°ST STAGE CYLINDER O-RING 2400 NBR 70 101,34x1,78
5	4	13-00-0010	VITE 8X60 T.C.E. ZINC. DIN 912	SCREW 8X60 T.C.E. ZINC. DIN 912
6	4	RON/8	RONDELLA PIANA ZINCATA M8	M8 WASHER FLAT ZINC
7	4	13-00-0018	DADO ZINCATO M8 MEDIO	MIDDLE NUT M8 ZINC.
8	4	13-01-0008	TIRANTE PRIMO STADIO MCH13/16	FIRST STAGE TIE ROD MCH13/16

1° STADIO MCH-11-13-16-18 - 1st STAGE MCH-11-13-16-18

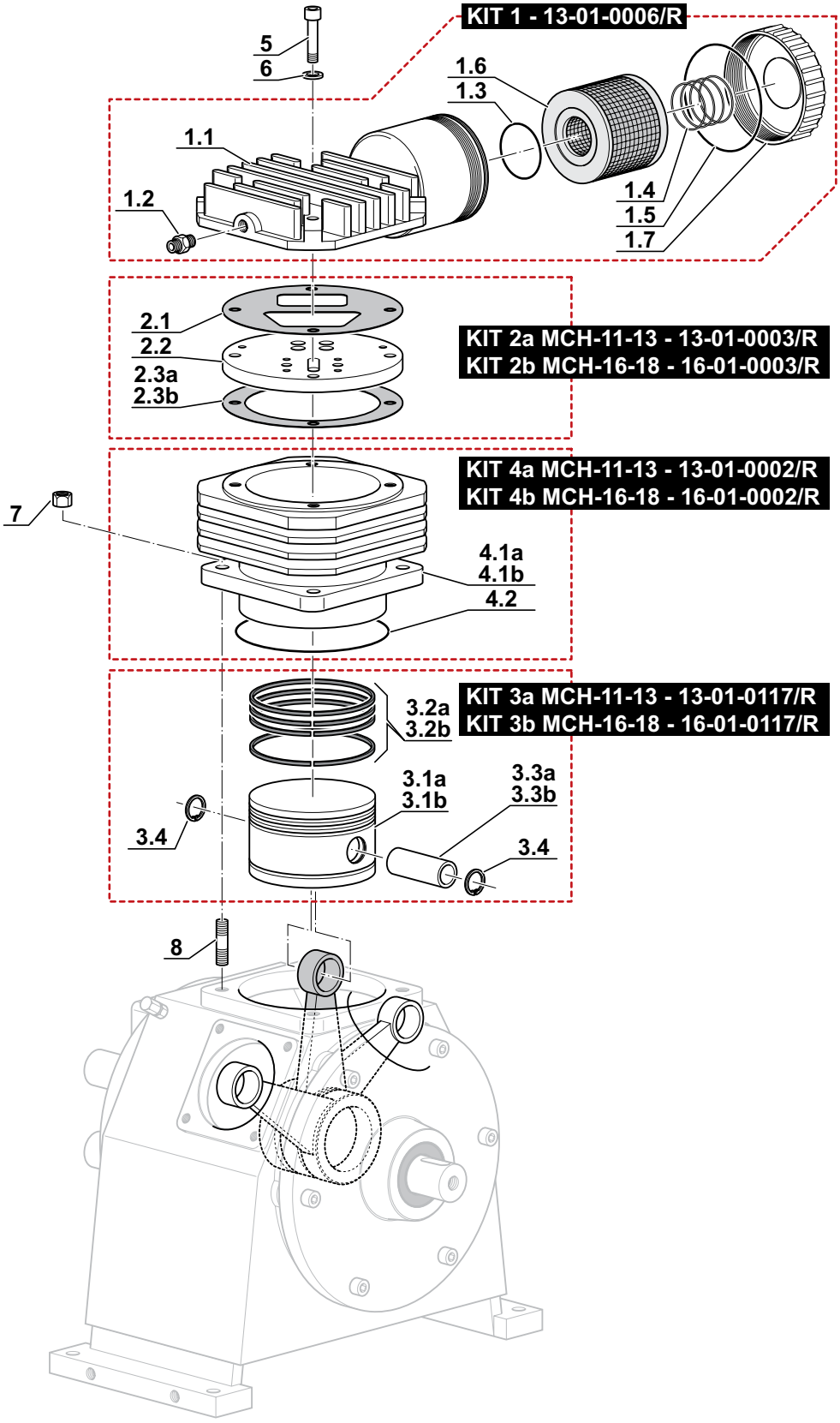

2° STADIO - 2nd STAGE

Rif. Pos.	Q.tà Q.ty	Codice Code	Descrizione	Description
KIT1	1	13-02-0046/R	KIT TESTA 2° STADIO MCH13/16	SECOND STAGE HEAD MCH13/16 KIT
1.1	2	13-02-0045	RACCORDO DIRITTO 1/4 TUBO 10mm	LONG STRAIGHT 1/4 PIPE FITTING10MM.
1.2	1	13-02-0046	TESTA 2° STADIO MCH13/16	SECOND STAGE HEAD MCH13/16
KIT2	1	13-02-0049/R	KIT VALV.SCAR.2° STAD. MCH13/16	2ND STAGE PRESSURE VALVE ASS MCH13/16 KIT
2.1	1	13-02-0049	VALV.SCAR.2° STAD. MCH13/16	2ND STAGE PRESSURE VALVE ASS MCH13/16
2.2	1	13-02-0056	O-RING 4087 VITON NBR 90 SHORT (21.82x3.53) VALVOLA 2° STADIO	O-R VALVE 2ND STAGE 4087 (21,82X3,53) VITON NBR 90 SHORT
2.3	1	13-03-0029	O-RING 2062 VITON NBR 90 SHORT(15.60x1.78)	O-RING VITON NBR 90 SHORT FOR 3RD STAGE EXHAUST VALVE
KIT3	1	13-02-0044/R	VALVOLA ASPIRAZIONE 2°STADIO	2ND STAGE SUCTION VALVE ASSBLY
3.1	1	13-03-0029	O-RING 2062 VITON NBR 90 SHORT(15.60x1.78)	O-RING VITON NBR 90 SHORT FOR 3RD STAGE EXHAUST VALVE
3.2	1	13-02-0044	VALVOLA ASPIRAZIONE 2°STADIO	2ND STAGE SUCTION VALVE ASSBLY
KIT4a	1	13-02-0112/R	KIT PISTONE 2^ STADIO DIAM.60/36mm MCH-13	2ND STAGE PISTON DIA. 60/36mm MCH13 KIT
4.1a	1	13-02-0112	PISTONE 2^ STADIO DIAM.60/36mm MCH13	2ND STAGE PISTON DIA. 60/36mm MCH13
4.2a	4	13-02-0113	SERIE FASCE ELASTICHE D.36mm	PISTON RING DIA. 36mm 2ND STAGE MCH13
4.3	2	13-00-0110	SEEGER/ANELLO ELAST.SPIN.PIST.	SEEGER RETAINING RING
4.4	1	13-02-0111	SPINOTTO 3° STADIO D.60,36mm	2ND STAGE PIN
KIT4b	1	16-02-0112/R	KIT PISTONE 2^ STADIO DIAM.60/38mm MCH16	2ND STAGE PISTON D.60/38mm MCH16 KIT
4.1b	1	16-02-0112	PISTONE 2^ STADIO DIAM.60/38mm MCH16	2ND STAGE PISTON D.60/38mm MCH16
4.2b	4	16-02-0113	SERIE FASCE ELASTICHE D.38mm MCH16	2ND STAGE PISTON RINGS D.38mm MCH/16
4.3	2	13-00-0110	SEEGER/ANELLO ELAST.SPIN.PIST.	SEEGER RETAINING RING
4.4	1	13-02-0111	SPINOTTO 3° STADIO D.60,36mm	2ND STAGE PIN
KIT5	1	13-00-0195	VALVOLA SICUREZZA PRIMO STADIO MCH-13-16 10bar	1ST STAGE SAFETY VALVE MCH-13-16 10bar
5.1	1	13-00-0195/1	CORPO VALVOLA SICUREZZA 10 BAR PRIMO STADIO MCH-13/16	SAFETY BODY VALVE 1ST STAGE MCH-13-16 10bar
5.2	1	36-05-020B	PASTIGLIA PISTONE VALV. SIC. 2°/3° ST. MCH36	PLATE SAFETY VALVE 2°/3° ST. MCH36
5.3	1	13-00-0195/4	PISTONCINO INTERNO VALVOLA SIC. 1°STADIO 10 BAR MCH 13/16	PISTON
5.4	1	6-05-015G	MOLLA BILANCIAMENTO VALVOLA SICUREZZA MCH6	VALVE SPRING
5.5	1	13-00-0195/3/7	VITE VALVOLA SICUREZZA 10 BAR PRIMO STADIO MCH13/16	SAFETY VALVE SCREW
KIT6a	1	13-02-0043/R	KIT CILINDRO SECONDO STADIO D.36mm MCH13	2ND STAGE 36MM CYLINDER MCH13 KIT
6.1a	1	13-02-0043	CILINDRO SECONDO STADIO D.36mm MCH13	2ND STAGE 36MM CYLINDER MCH13
6.2	1	13-00-0039	O-RING 3237 NBR70 (60.00x2.62) CILINDRO 2°STADIO MCH13	2°ND STAGE CYLINDER O-RING 3237 NBR 70 60x2,62
KIT6b	1	16-02-0043/R	KIT CILINDRO SECONDO STADIO D.38mm MCH16	2ND STAGE CYLINDER D.38mm MCH16 KIT
6.1b	1	16-02-0043	CILINDRO SECONDO STADIO D.38mm MCH16	2ND STAGE CYLINDER D.38mm MCH16
6.2	1	13-00-0039	O-RING 3237 NBR70 (60.00x2.62) CILINDRO 2°STADIO MCH13	2°ND STAGE CYLINDER O-RING 3237 NBR 70 60x2,62
KIT7	1	13-02-0037/R	KIT CILINDRO GUIDA 2° STAD. D.60mm	2ND STAGE 60MM. GUIDING CYLINDMCH13/16 KIT
7.1	1	13-02-0037	CILINDRO GUIDA 2° STAD. D.60mm	2ND STAGE 60MM. GUIDING CYLINDMCH13/16
7.2	1	13-00-0015	O-RING 2275 NBR70 (69.57x1.78)	3°RD STAGE CYLINDER O-RING 2275 NBR 70 69,57x1,78
KIT8	1	13-02-0046/R	TESTA 2° STADIO COMPLETA DI VALVOLE E RACCORDI	2ND STAGE HEAD COMPLETE WITH FITTING AND VALVE
9	4	13-00-0018	DADO ZINCATO M8 MEDIO	MIDDLE NUT M8 ZINC.
10	4	13-02-0040	TIRANTE SECONDO STADIO MCH13/16	2ND STAGE TIE ROD
11	6	13-00-0075	VITE T.C.E. ZINC. 8x30	SCREW 8X30 T.C.E. ZINC.

2° STADIO - 2nd STAGE

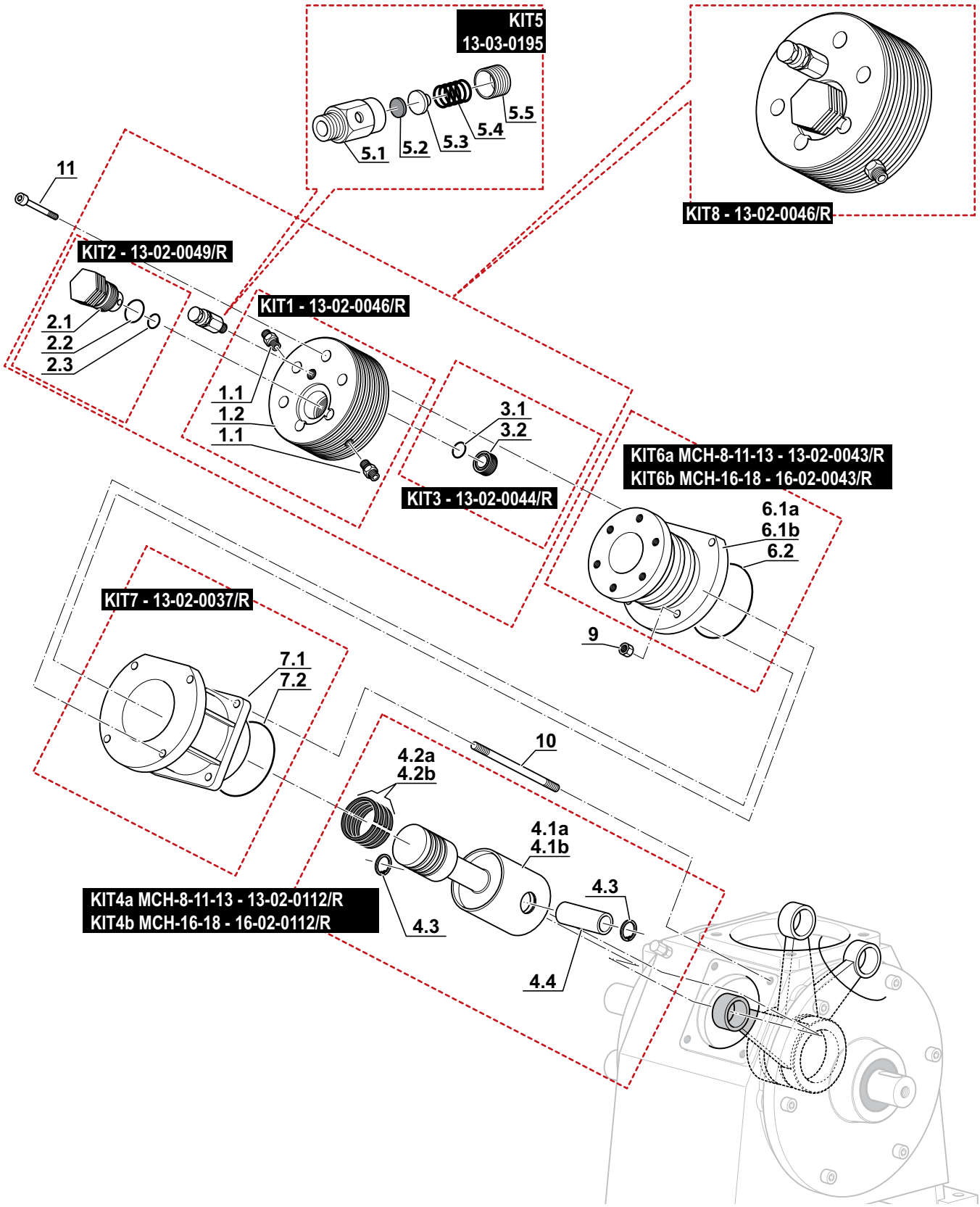

3° STADIO - 3rd STAGE

Rif. Pos.	Q.tà Q.ty	Codice Code	Descrizione	Description
KIT1	1	13-03-0027/R	KIT TESTA 3° STADIO MCH13/16	3RD ST.GE HEAD FOR MCH13/16 KIT
1.1	1	13-03-0028	VALV.SCAR.3° STAD.MCH13/16	3RD STAGE PRESSURE VALVE ASS MCH13/16
1.2	1	13-03-0029	O-RING 2062 VITON NBR 90 SHORT(15.60x1.78)	O-RING VITON NBR 90 SHORT FOR 3RD STAGE EXHAUST VALVE
1.3	1	13-03-0027	TESTA 3° STADIO MCH13/16	3RD ST.GE HEAD FOR MCH13/16
1.4	2	13-00-0025E	RACCORDO 1/4 G -TUBO 6mm DIRITTO ERMETO	FITTING 1/4 G -PIPE 6mm ERMETO
1.5	2	GUAR1319	RONDELLA 1/4 IN RAME	COPPER WASHER 1/4
1.6	1	13-03-0020	VALV. ASPIRAZ.3° STAD.MCH13/16	3RD SUCTION VALVE ASSBLY MCH13/16
1.7	2	OR-2025/V-90	O-RING 2025 VITON 90 (6,07X1,78) VERDI	O-RING 2025 VITON 90 (6,07X1,78) GREEN
KIT2	1	13-03-0126/R	KIT PISTONE 3° STADIO MCH13/16	PISTON 3RD ST.GE 14 MCH13/16 KIT
2.1	5	13-03-0124	SERIE FASCE ELASTICHE 3°STADIO	3°RD STAGE PISTON RINGS MCH13/16
2.2	1	13-03-0126	PISTONE 3° STADIO D.14mm	PISTON 3RD ST.GE 14 DIA mm
2.3	1	13-03-0123	O-RING 2100 VITON NBR 90 SHORT(25.12x1.78) 3° STADIO	O-R 3RD STAGE 2100 (25,12X1,78) VITON NBR 90 SHORT
2.4	1	13-03-0125	CILINDRO 3° STADIO D.14mm	3RD STAGE CYLINDER DIA 14mm MCH13/16
KIT3	1	13-00-0019/R	KIT TUBO LUBRIFICAZIONE 3° STADIO MCH13/16	LUBRICATION TUBE 3RD STAGE MCH13/16
3.1	1	13-00-0021	RACCORDO 90° 1/8 NPT	FITTING 90° 1/8 NPT
3.2	1	13-00-0019	TUBO VISUALIZZAZIONE LUBRIFIC.	OIL LEVEL INDICATOR
3.3	1	RACC0818R	RACC.DIAM. 8 1/8 PER TUBO RILS	CONNECTION .DIAM. 8 1/8 FOR RILS TUBE
KIT4	1	13-03-0120/R	KIT PATTINO GUIDA 3° STADIO MCH13/16	PUSHING PISTON 3RD SATGE MCH13-16
4.1	1	13-03-0120	PATTINO GUIDA 3^STADIO DIAM.	PUSHING PISTON 60mm. MCH13-16
4.2	1	13-02-0111	SPINOTTO 3° STADIO D.60,36mm	2ND STAGE PIN
4.3	2	13-00-0110	SEEGER/ANELLO ELAST.SPIN.PIST.	SEEGER RETAINING RING
KIT5	1	13-03-0030/R	KIT COPERCHIO TESTA 3° ST.MCH13/16	3RD STAGE HEAD COVER KIT
5.1	1	13-03-0030	COPERCHIO TESTA 3° ST.MCH13/16	3RD STAGE HEAD COVER
5.2	1	13-00-0032	DADO INOX CIECO M8 DIN 1587	STAINLESS STEEL 8MM CAP NUT
5.3	1	13-03-0033	RONDELLA RAME M8 (8X14X1,5)	8MM COPPER WASHER MCH13/16
5.4	1	13-03-0034	GRANO INOX P. 'A' 8x25	8X25 STAINLESS STEEL DOWEL
KIT6	1	13-02-0017/R	KIT CILINDRO GUIDA TERZO STADIO	3RD STAGE GUIDING CYLINDER MCH13/16 KIT
6.1	1	13-02-0017	CILINDRO GUIDA TERZO STADIO	3RD STAGE GUIDING CYLINDER MCH13/16
6.2	1	13-00-0039	O-RING 3237 NBR70 (60.00x2.62) CILINDRO 2°STADIO MCH13	2°ND STAGE CYLINDER O-RING 3237 NBR 70 60x2,62
KIT7	1	13-03-0190/R	KIT CILINDRO INFER. PATTINO GUIDA 60MM TERZO STADIO	LOWER 3RD STAGE 60MM. GUIDING CYLINDER KIT
7.1	1	13-03-0190	CILINDRO INFER. PATTINO GUIDA 60MM TERZO STADIO	LOWER 3RD STAGE 60MM. GUIDING CYLINDER
7.2	1	13-00-0015	O-RING 2275 NBR70 (69.57x1.78)	3°RD STAGE CYLINDER O-RING 2275 NBR 70 69,57x1,78
8	6	13-00-0031	VITE 8X55 T.C.E. ZINC.	SCREW 8X55 T.C.E. ZINC.
9	4	13-00-0018	DADO ZINCATO M8 MEDIO	MIDDLE NUT M8 ZINC.
10	4	13-03-0016	TIRANTE TERZO STADIO MCH13	3RD STAGE TIE ROD

3° STADIO - 3rd STAGE

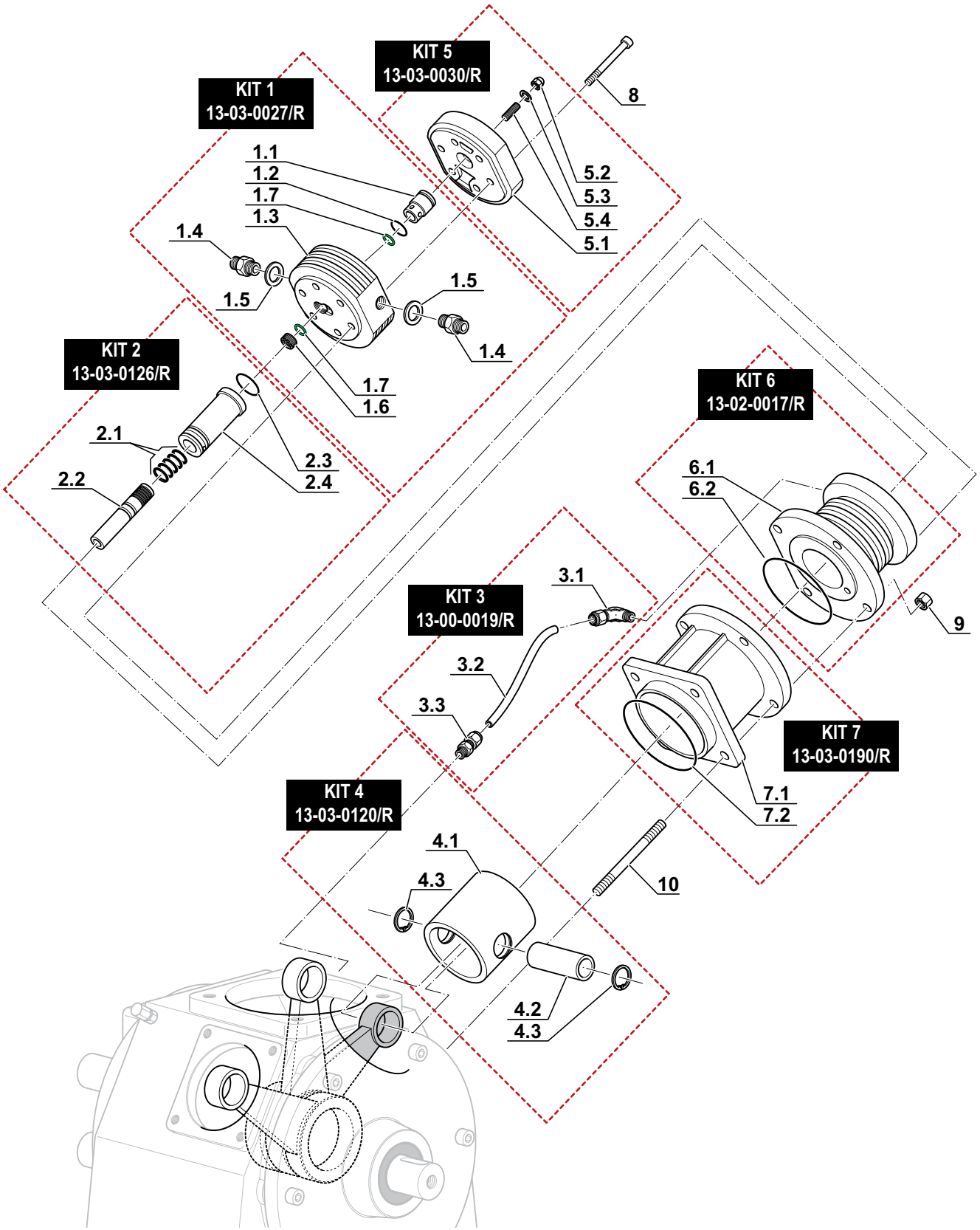

CIRCUITO DI PRESSIONE - PRESSURE CIRCUIT

Rif. Pos.	Q.tà Q.ty	Codice Code	Descrizione	Description
KIT1	1	13-00-0085/R	KIT TUBO RAFFREDDAMENTO 10MM 1°-2°ST.	1ST-2ND STAGE 10MM COOLING PIPE KIT
1.1	1	13-00-0085	TUBO RAFFRED.10mm 1°-2°ST.	1ST-2ND STAGE 10MM COOLING PIPE
1.2	1	13-02-0045E	Raccordo Dritto 1/4 G - Tubo 10mm Testa 2°Std MCH 13/16	STRAIGHT FITTING 1/4 G - TUBE 10mm HEAD 2°Std MCH 13/16
1.3	1	13-00-0178E	RACCORDO TUBO 10mm 1/4 NPT	FITTING TUBE10mm 1/4 NPT
1.4	2	13-00-0091	STAFFA PORTATUBO ZINC. 45X15mmMCH13/16	PIPE HOLDING BRACKET 45X15mmMCH13/16
1.5	10	13-00-0137	DADO ZINCATO AUTOBLOC. M6 ALTO	SELF LOCKING NUT M6 HIGH
1.6	4	13-00-0067	VITE 6X35 T.C.E. ZINC. DIN 912	SCREW 6X35 T.C.E. ZINC. DIN 912
1.7	4	13-00-0186	SEMISTAFFA FERMATUBO D.10 3 FORI 7 SEDI	3 HOLE PIPE-HOLDING BRACKET
1.8	8	13-00-0087	VITE T.C.E. ZINC. 6x30 DIN 912	SCREW T.C.E. ZINC. 6x30 DIN 912
1.9	4	13-00-0197	SEMISTAFFA FERMATUBO D.10 2 FORI 8 SEDI	2 HOLE PIPE-HOLDING BRACKET
KIT2	1	13-00-0089/R	KIT TUBO RAFFREDDAMENTO 10MM 2°-3°ST.	2ND-1ST STAGE 10MM COOLING PIPE KIT
2.1	1	13-00-0089	TUBO RAFFR.10mm 2°/3°ST. (F)	2ND-3RD STAGE 10MM COOLING PIPE KIT
2.2	1	13-02-0045E	Raccordo Dritto 1/4 G - Tubo 10mm Testa 2°Std MCH 13/16	STRAIGHT FITTING 1/4 G - TUBE 10mm HEAD 2°Std MCH 13/16
2.3	1	13-00-0026E	RACCORDO 1/4 G -TUBO 10mm DIRITTO ERMETO	STRAIGHT FITTING 1/4 G -TUBO 10mm ERMETO
2.4	2	13-00-0083	STAFFA PORTATUBO ZINC. 75X15mm	PIPE HOLDING BRACKET 75X15MM. MCH13/16
2.5	10	13-00-0137	DADO ZINCATO AUTOBLOC. M6 ALTO	SELF LOCKING NUT M6 HIGH
2.6	4	13-00-0067	VITE 6X35 T.C.E. ZINC. DIN 912	SCREW 6X35 T.C.E. ZINC. DIN 912
2.7	4	13-00-0186	SEMISTAFFA FERMATUBO D.10 3 FORI 7 SEDI	3 HOLE PIPE-HOLDING BRACKET
2.8	8	13-00-0087	VITE T.C.E. ZINC. 6x30 DIN 912	SCREW T.C.E. ZINC. 6x30 DIN 912
2.9	4	13-00-0197	SEMISTAFFA FERMATUBO D.10 2 FORI 8 SEDI	2 HOLE PIPE-HOLDING BRACKET
KIT3	1	13-03-0023/N/R	KIT TUBO RAFFREDAMENTO 6MM 3°-SEPARATORE	3RD-SEPARATOR 6MM COOLING PIPE KIT
3.1	1	13-03-0023/N	TUBO RAFFREDAM.TO DIAM. 6 (C)	6MM COOLING PIPE 3RD-SEPARATOR
3.2	1	13-00-0174E	Racc. 1/8 NPT Tubo 6 mm	STRAIGHT 1/8 PIPE FITTING 6
3.3	1	13-00-0025E	RACCORDO 1/4 G -TUBO 6mm DIRITTO ERMETO	FITTING 1/4 G -TUBO 6mm ERMETO
3.4	2	13-00-0133	STAFFA PORTATUBO 6 mm	TUBE CLAMP 6 MM SEPARATOR-4TH STAGE
3.5	2	13-00-0134/1	GOMM ANTIVIBR 2 FORI TUBO DA 6	ANTI VIBRATION BLOCK TUBE6 2 HOLE
3.6	4	DADM6AUTBAS	DADO ZINCATO AUTOBL. M6 BASSO	SELF LOCKING NUT LOW M6 DIN 985
3.7	4	13-00-0041	VITE T.C.E. ZINC. 6x25 DIN 912	SCREW T.C.E. ZINC. 6x25 DIN 912
3.8	1	DA05	DADO ZINC. AUTOB. M5 BASSO	SELF LOCKING NUT ZINC. M5 LOW
3.9	1	VITE0525Z	VITE T.C.E. ZINC. 5x25 DIN912	SCREW T.C.E. ZINC. 5x25 DIN912
3.10	8	13-00-0134	GOMM. ANTIVIBR. PORTATUB 3 FOR	ANTI VIBRATION BLOCK TUBE6 3 HOLE
3.11	2	13-00-0136	STAFFA DOPPIA PORTATUBO 6mm	DOUBLE 6MM. PIPE-HOLDING BRACKET MCH13/16
3.12	2	13-00-0135	STAFFA SINGOLA PORTATUBO 3mm	SINGLE 6MM. PIPE-HOLDING BRACKET MCH13/16
KIT4	1	13-00-0036/R	KIT TUBO RAFFREDAMENTO 8MM SEPARATORE-3°	SEPARATOR-3RD 8MM COOLING PIPE KIT
4.1	1	13-00-0036	TUBO 8mm COLLEG.SEP/3° ST.(D)	TUBE 8MM. 3RD STAGE/SEPARATOR(D) MCH13/16
4.2	2	13-00-0175E	Racc. 1/4 G Tubo 8 mm	1/4 G TUBE 8mm FITTING
5	4	VITE0620	VITE T.C.E. ZINC. 6x20 DIN912	SCREW T.C.E. ZINC. 6X20 DIN912
6	2	13-00-0075	VITE T.C.E. ZINCATA 8x30	SCREW T.C.E. ZINCATA 8x30
7	1	GUAR1319	RONDELLA 1/4 IN RAME	COPPER WASHER 1/4

CIRCUITO DI PRESSIONE - PRESSURE CIRCUIT

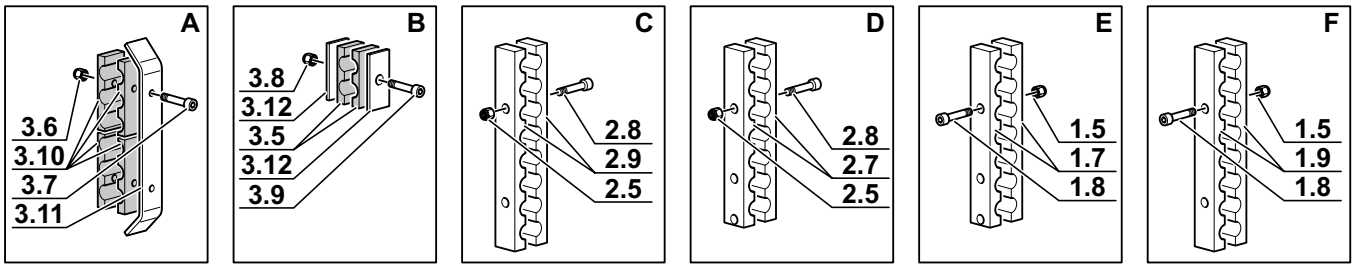

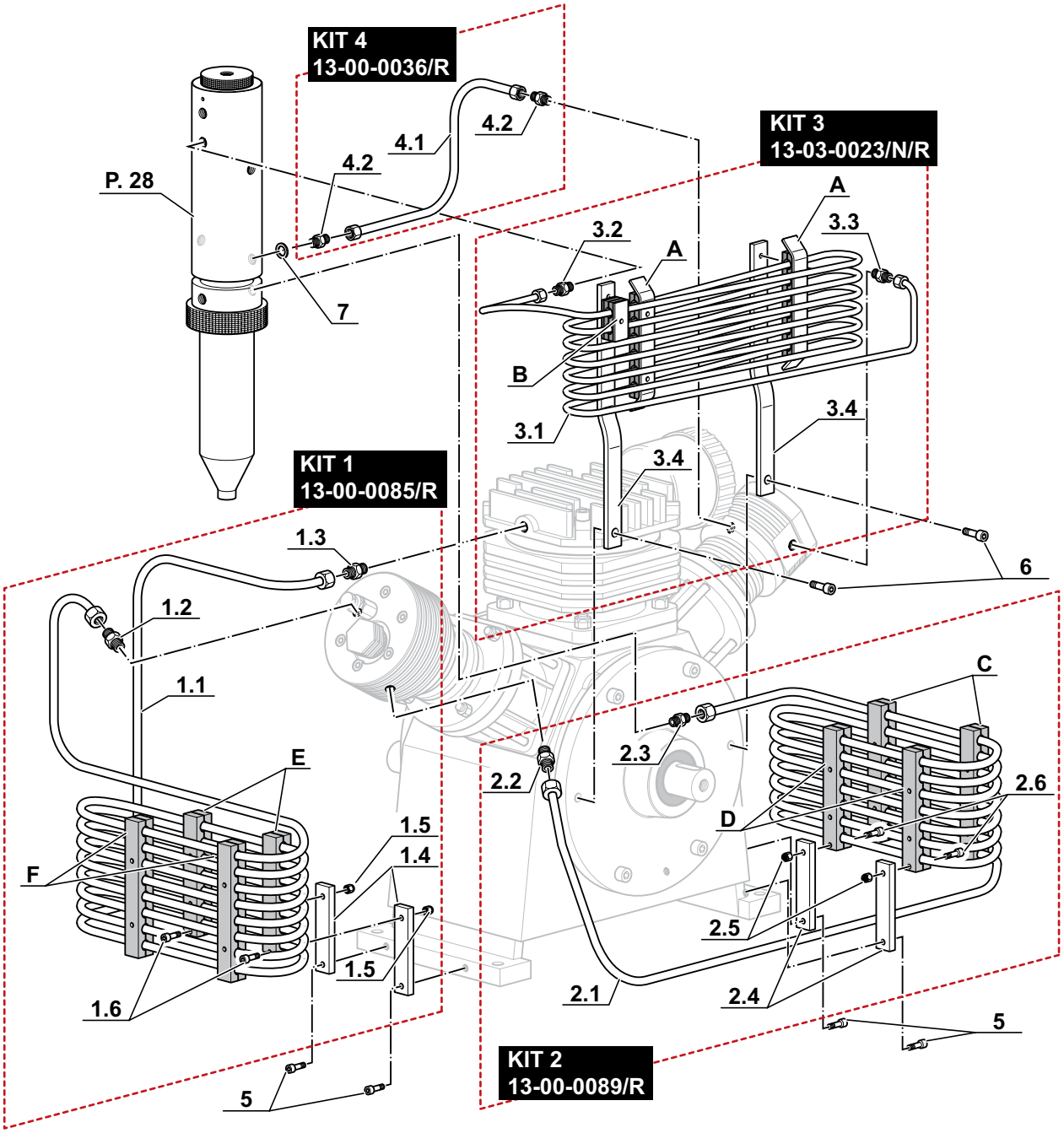

CIRCUITO DI PRESSIONE - PRESSURE CIRCUIT

Mod: Tropical - Tropical Plus

Rif. Pos.	Q.tà Q.ty	Codice Code	Descrizione	Description
KIT1	1	13-01-0085/TR/R	KIT TUBO RAFFR. 1°-SEP. 12MM MCH13/16 TR-TRPL	COOLING PIPE 12MM 1ST-SEPARATOR MCH13/16 TR-TRPL KIT
1.1	1	13-01-0085/TR	TUBO RAFFR. MCH13 TROPICAL/TROPICAL PLUS DIAM. 12 (C)	COOLING PIPE 12MM 1ST-SEPARATOR MCH13/16 TROPICAL-TROPICALPL
1.2	1	RACC/E2115121/4	Raccordo Dritto 1/4 NPT - Tubo 12mm CORTO	STRAIGHT FITTING 1/4NPT TUBE 12MM SHORT
1.3	1	RACCE212112LG1/2	RACCORDO E212-112L G1/2" CON GUARNIZIONE LARGA	FITTING E212-112L G1/2" WITH GASKET
1.4	2	13-00-0083	STAFFA PORTATUBO ZINC. 75X15mm	PIPE HOLDING BRACKET 75X15MM. MCH13/16
1.5	8	13-00-0137	DADO ZINCATO AUTOBLOC. M6 ALTO	SELF LOCKING NUT M6 HIGH
1.6	2	13-00-0067	VITE 6X35 T.C.E. ZINC. DIN 912	SCREW 6X35 T.C.E. ZINC. DIN 912
1.7	4	13-00-0197/TR	SEMISTAFFA FERMATUBO D.12 2 FORI 8 SEDI	2 HOLE PIPE-HOLDING BRACKET
1.8	6	13-00-0087	VITE T.C.E. ZINC. 6x30 DIN 912	SCREW T.C.E. ZINC. 6x30 DIN 912
1.9	2	13-00-0197/TR	SEMISTAFFA FERMATUBO D.12 2 FORI 8 SEDI	2 HOLE PIPE-HOLDING BRACKET
KIT2	1	13-02-0086/TR/R	KIT TUBO RAFFR SEP-2° 12MM MCH13/16 TR-TRPL	COOLING PIPE 12MM SEPARATOR-2ND MCH13/16 TR-TRPL KIT
2.1	1	13-02-0086/TR	TUBO RAFFR. DIAM. 12 MCH13/16 TROPICAL/TROPICAL PLUS (B)	COOLING PIPE 12MM SEPARATOR-2ND MCH13/16 TROPICAL-TROPICALP
2.2	1	RACC/E212112L38	RACCORDO E212-112L G3/8"	FITTING E212-112L G3/8"
2.3	1	13-02-0047E	Raccordo Dritto 1/4 G - Tubo 12mm Testa 2°Std MCH 13/16	STRAIGHT FITTING 1/4G TUBE 12MM
KIT3	1	13-00-0089/TR/R	KIT TUBO RAFFR. 2°-SEP. 12MM MCH13/16 TR-TRPL	COOLING PIPE 12MM 2ND-SEPARATOR MCH13/16 TR-TRPL KIT
3.1	1	13-00-0089/TR	TUBO RAFFR.12mm MCH13/16 TROPICAL/TROPICAL PLUS (D)	COOLING PIPE 12MM 2ND-SEPARATOR MCH13/16 TR-TR.PL
3.2	1	13-02-0047E	Raccordo Dritto 1/4 G - Tubo 12mm Testa 2°Std MCH 13/16	STRAIGHT FITTING 1/4G TUBE 12MM
3.3	1	RACC/E212112L14	RACCORDO E212-112L G1/4"	FITTING E212-112L G1/4" TUBE12
3.4	2	13-00-0083	STAFFA PORTATUBO ZINC. 75X15mm	PIPE HOLDING BRACKET 75X15MM. MCH13/16
3.5	8	13-00-0137	DADO ZINCATO AUTOBLOC. M6 ALTO	SELF LOCKING NUT M6 HIGH
3.6	2	13-00-0067	VITE 6X35 T.C.E. ZINC. DIN 912	SCREW 6X35 T.C.E. ZINC. DIN 912
3.7	4	13-00-0197/TR	SEMISTAFFA FERMATUBO D.12 2 FORI 8 SEDI	2 HOLE PIPE-HOLDING BRACKET
3.8	4	13-00-0087	VITE T.C.E. ZINC. 6x30 DIN 912	SCREW T.C.E. ZINC. 6x30 DIN 912
3.9	2	13-00-0197/TR	SEMISTAFFA FERMATUBO D.12 2 FORI 8 SEDI	2 HOLE PIPE-HOLDING BRACKET
KIT4	1	13-00-0036/N/R	KIT TUBO 8mm COLLEG.SEP/3° ST.(D)	TUBE 8mm SEP/3° ST.(D) KIT
4.1	1	13-00-0036/N	TUBO 8mm COLLEG.SEP/3° ST.(D)	TUBE 8mm SEP/3° ST.(D)
4.2	2	13-00-0175E	Racc. 1/4 G Tubo 8 mm	1/4 G TUBE 8mm FITTING
KIT5	1	13-03-0025/TR/R	KIT TUBO RAFFR. MCH13/16 TROPICAL PLUS 6X1	COOLING TUBE MCH13/16 TROPICAL PLUS 6X1 KIT
5.1	1	13-03-0023/N	TUBO RAFFR. MCH13/16 TROPICAL PLUS 6X1	COOLING TUBE MCH13/16 TROPICAL PLUS 6X1
5.2	1	RACC/E212-106LG	RACCORDO E212-106L G1/4"	FITTING E212-106L G1/4"
5.3	1	RACC/E231506L18	RACCORDO E231-506L 1/8" NPT	1/8" NPT - TUBE6 FITTING
5.4	2	13-00-0133/TR	STAFFA PORTATUBO 6 mm	PIPE HOLDING BRACKET 6mm MCH13/16 TROPICAL
5.5	2	13-00-0136	STAFFA DOPPIA PORTATUBO 6mm	DOUBLE 6MM. PIPE-HOLDING BRACKET MCH13/16
5.6	4	DADM6AUTBAS	DADO ZINCATO AUTOBL. M6 BASSO	SELF LOCKING NUT LOW M6 DIN 985
5.7	4	13-00-0041	VITE T.C.E. ZINC. 6x25 DIN 912	SCREW T.C.E. ZINC. 6x25 DIN 912
5.8	8	13-00-0134	GOMM. ANTIVIBR. PORTATUB 3 FOR	ANTI VIBRATION BLOCK TUBE6 3 HOLE
6	4	VITE0620	VITE T.C.E. ZINC. 6x20 DIN912	SCREW T.C.E. ZINC. 6X20 DIN912
7	2	13-00-0075	VITE T.C.E. ZINCATA 8x30	SCREW T.C.E. ZINCATA 8x30
8	1	GUAR1319	RONDELLA 1/4 IN RAME	COPPER WASHER 1/4

CIRCUITO DI PRESSIONE - PRESSURE CIRCUIT

Mod: Tropical - Tropical Plus

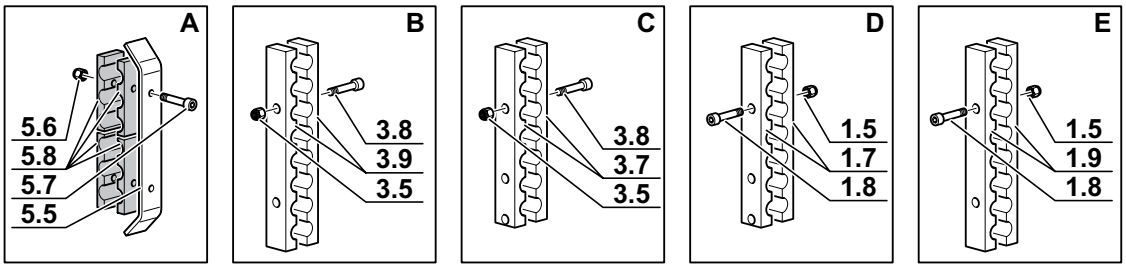

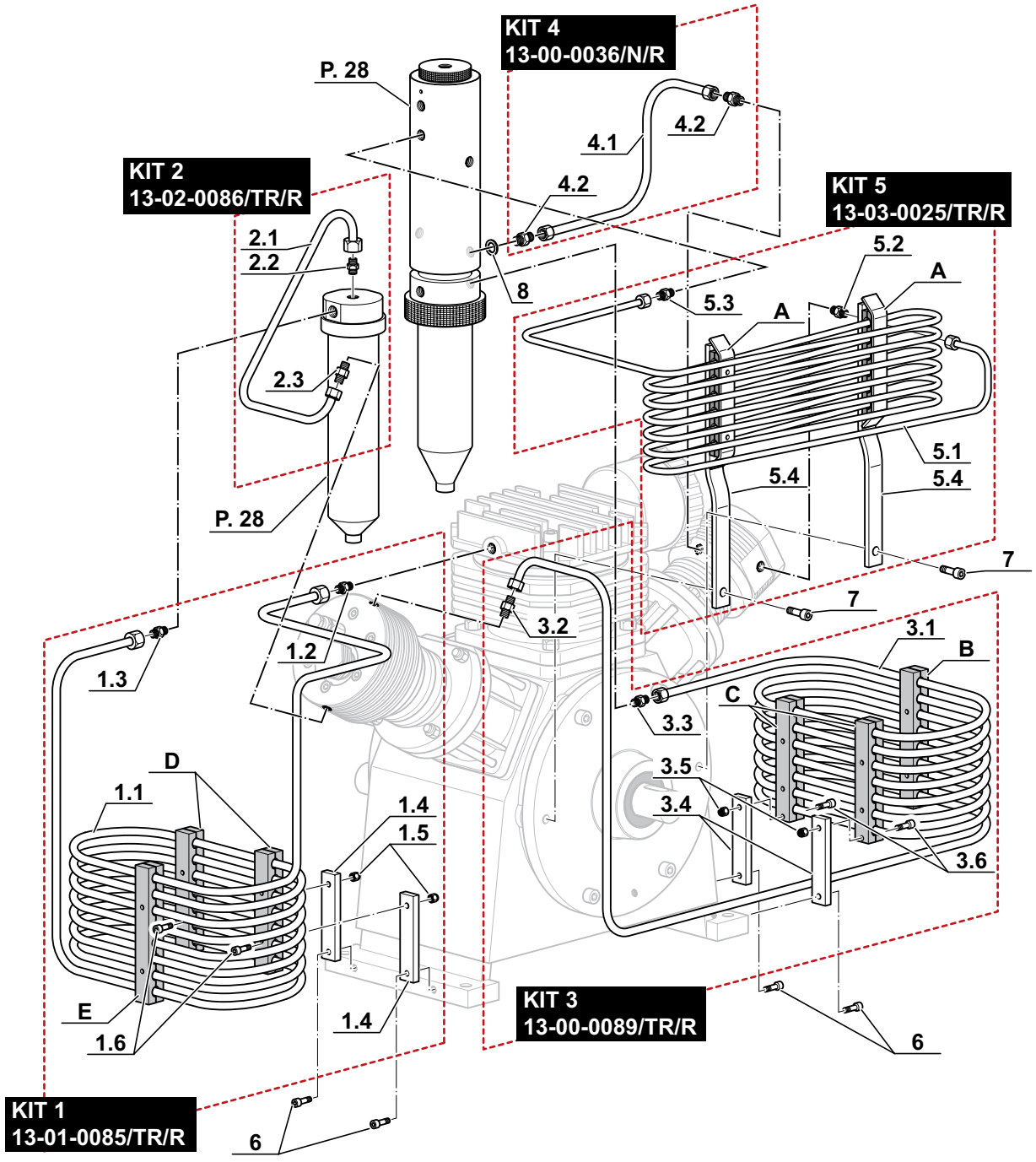

STAFFE DI FISSAGGIO - BRACKETS FIXING

Rif. Pos.	Q.tà Q.ty	Codice Code	Descrizione	Description
1	1	13-00-0102	STAFFA PORTASEPARATORE	SEPARATOR CLAMP
2	2	VITE0825	VITE T.C.E. ZINC. 8x25 TESTA BASSA	SCREW T.C.E. ZINC. 8x25 REDUCED HEAD
3	2	13-00-0075	VITE T.C.E. ZINCATA 8x30	SCREW T.C.E. ZINCATA 8x30
4	4	13-00-0018	DADO ZINCATO M8 MEDIO	MIDDLE NUT M8 ZINC.
5	1	13-00-0094	PIASTRA PORTAFILTRI MCH13/16 ZINCATA BIANCA CON BECCO	HOLD-FILTERS PLATE MCH13/16
6	2	13-00-0093	STAFFA PORTAFILTRO MCH13-16	FILTER HOLDING BRACKET MCH13/16
7	2	13-00-0101	DADO ZINCATO AUTOBLOC. M8 ALTO	8MM SELF-LOCKING NUT

STAFFE DI FISSAGGIO - BRACKETS FIXING

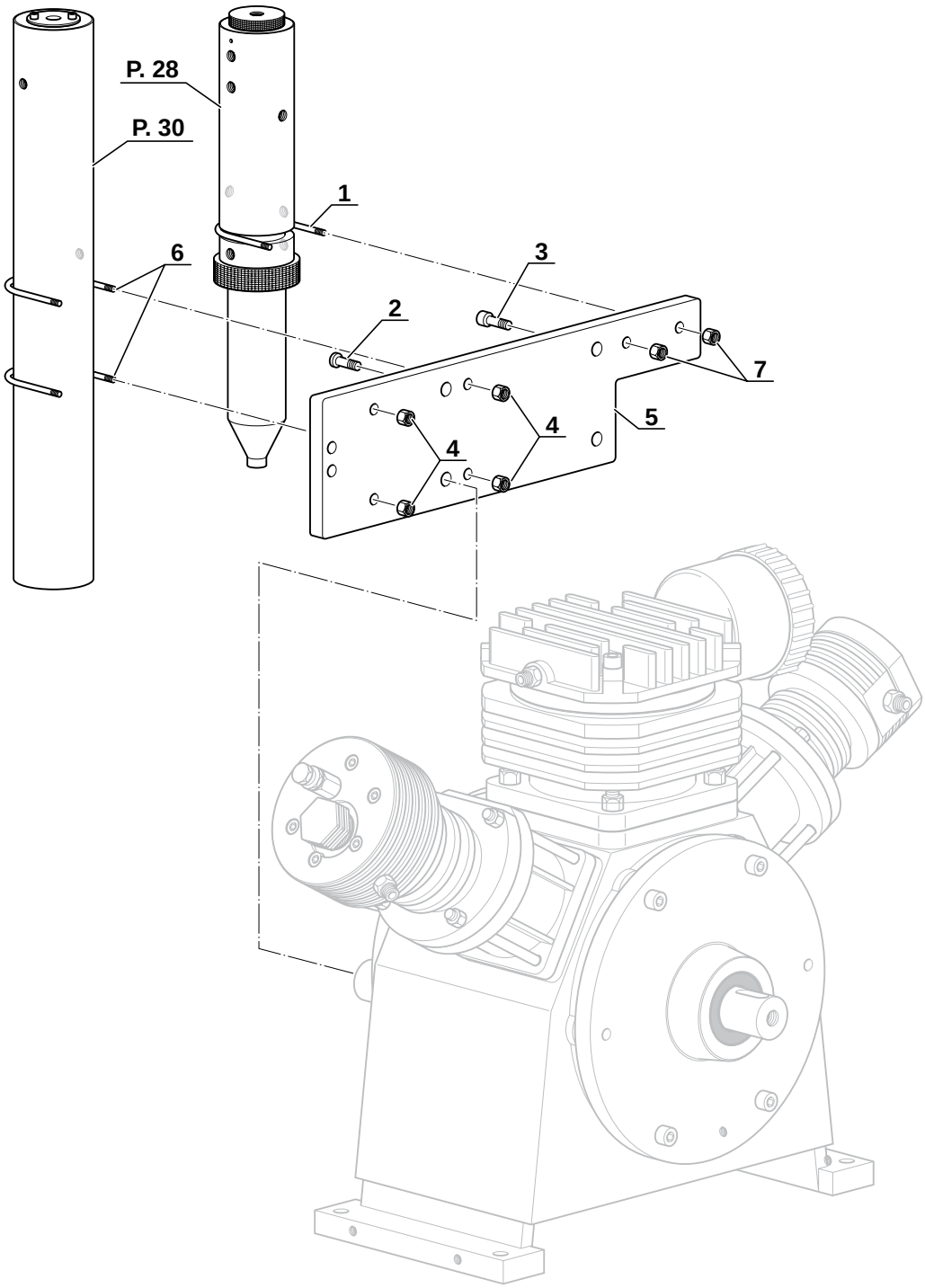

STAFFE DI FISSAGGIO - BRACKETS FIXING

Mod: Tropical - Tropical Plus

Rif. Pos.	Q.tà Q.ty	Codice Code	Descrizione	Description
1	3	13-00-0102	STAFFA PORTASEPARATORE	SEPARATOR CLAMP
2	2	13-00-0101	DADO ZINCATO AUTOBLOC. M8 ALTO	8MM SELF-LOCKING NUT
3	4	13-00-0048	VITE 8X25 T.C.E. ZINC. DIN 912	SCREW 8X25 T.C.E. ZINC. DIN 912
4	4	13-00-0018	DADO ZINCATO M8 MEDIO	MIDDLE NUT M8 ZINC.
5	1	13-00-0094/1	PIASTRA PORTA SEPARATORE MCH13/16 ZINCATA BIANCA	CONDENSATE SEPARATOR PLATE MCH13-16 ZINC.
6	1	13-00-0094/2	PIASTRA QUADRA PORTA SEPARAATORE MCH13-16 TROPICAL	SQUARE CONDENSATE SEPARATOR PLATE MCH13-16 ZINC.

STAFFE DI FISSAGGIO - BRACKETS FIXING
Mod: Tropical - Tropical Plus

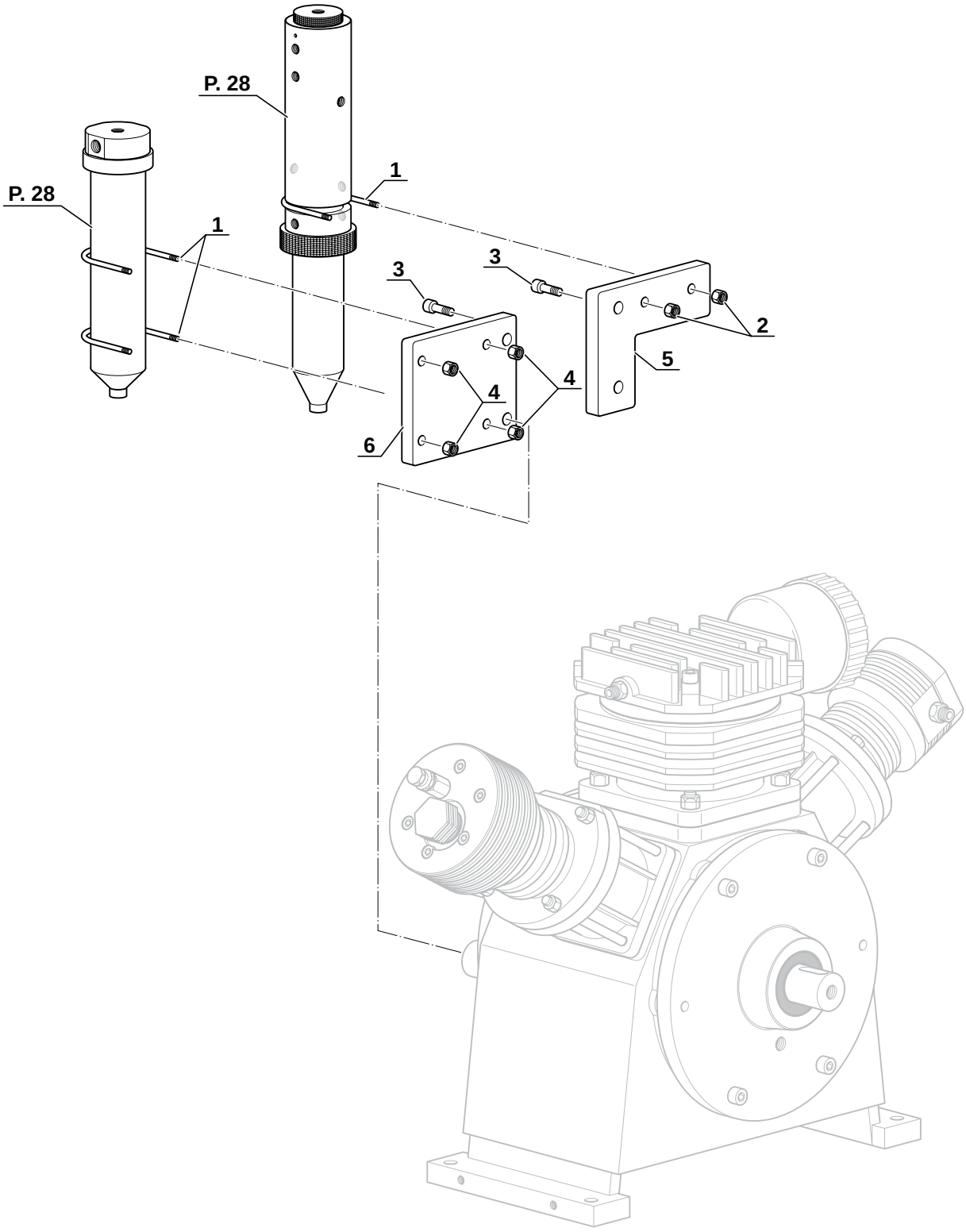

SEPARATORE DI CONDENSA - CONDENSATE SEPARATOR

Rif. Pos.	Q.tà Q.ty	Codice Code	Descrizione	Description
KIT1	1	13-00-0118/R	KIT TAPPO SEPARATORE	CONDENSATE SEPARATOR PLUG KIT
1.1	1	13-00-0118	TAPPO SEPARATORE MCH13/16	CONDENSATE SEPARATOR PLUG
1.2	2	OR-4143/90	O RING 4143 NBR 90 (36,1X3,53)	O RING 4143 NBR 90 (36,1X3,53)
KIT2	1	13-03-0179	VALVOLA SICUREZZA 2° STADIO 65bar	2ND STAGE SAFETY VALVE 65bar
2.1	1	13-03-0179/1	CORPO VALVOLA DI SICUREZZA 65bar	SAFETY BODY VALVE 65bar
2.2	1	36-05-020B	PASTIGLIA PISTONE VALV. SIC. 2°/3° ST. MCH36	PLATE
2.3	1	13-00-0179/4	PISTONCINO INTERNO VALVOLA SIC.PRIMO STADIO 65 BAR MCH 13/16	INTERNAL PISTON
2.4	1	13-03-0179/M	MOLLA VALVOLA SICUREZZA 2° STADIO MCH13-16 70 BAR	2ND STAGE VALVE SPRING
2.5	1	13-00-0195/3/65	VITE VALVOLA DI SICUREZZA	SAFETY VALVE SCREW
KIT3	1	13-05-012/R	SEPARATORE DI CONDENSA G3/8 MCH-13-16 TROPICAL	CONDENSATE SEPARATOR G3/8 MCH-13-16 TROPICAL
3.1	1	36-05-012	TAPPO DX SEPARATORE G3/8 3°STADIO	3RD STAGE G3/8 SEPARATOR RIGHT PLUG
3.2	1	36-05-008	O-RING 2212 NBR90 (53.67x1.78)MCH36	O-RING 2212 NBR90 (53.67x1.78)MCH36
3.3	1	OR-2150	OR- 2150 (37,82X1,78) NBR 70	OR- 2150 (37,82X1,78) NBR 70
3.4	1	36-05-050/ALL	TAPPO INTERNO SEP. NUOVO MCH-13/16	MCH-13/16 SEPARATOR FITTING INTERNAL PLUG
3.5	2	13-00-0141	DIFFUSORE SEPARATORE DI CONDENSA MCH13/16	NEW CONDENSATE SEPARATOR DIFFUSER MCH13/16
3.6	1	13-00-0121	RACC. PORTAFILTRO SEP. NUOVO MCH-13/16	MCH-13/16 SEPARATOR FITTING
3.7	1	ROND/48/12,5	RONDELLA DIAM. 48 C/F D.12,5 IN ALL. SP. 1	D48 C/F D.12,5 IN ALL. SP. 1 WASHER
3.8	1	SILENZ/E90A4003	SILENZIATORE 1/4 E90A4003	SILENCER 1/4 E90A4003
3.9	1	36-00-0600/180	SEPARATORE DIAM. 54 AISI 316L LUNGH. 180MM X MCH13/16	Condensate separator pipe, STAINLESS 180mm
3.10	1	36-05-013	Ghiera separatore	Separator ring
4	1	OR-2018/90	O RING 2018 NBR 90	O RING 2018 NBR 90
5	1	OR-2021	O RING 2021 NBR 90(5,28x1.78)	O RING 2021 NBR 90(5,28x1.78)
6	1	OR-114	O RING 114 NBR 70 (11.11x1.78)	O RING 114 NBR 70 (11.11x1.78)
7	2	13-00-0121	RACC. PORTAFILTRO SEP. NUOVO MCH-13/16	MCH-13/16 SEPARATOR FITTING
8	1	13-00-0115/N	CORPO SEPARATORE MCH13/16 NUOVO	NEW SEPARATOR BODY MCH13/16
9	1	SC000492/D	MOLLA VALVOLA DI NON RITORNO	CHECK VALVE SPRING
10	1	13-00-0141	DIFFUSORE SEPARATORE DI CONDENSA MCH13/16	NEW CONDENSATE SEPARATOR DIFFUSER MCH13/16
11	1	ROND/48/12,5	CAMPANA DIAM. 48 C/F D.12,5 IN ALL. SP. 1	D48 C/F D.12,5 IN ALL. SP. 1 WASHER
12	2	SILENZ/E90A4003	SILENZIATORE 1/4 E90A4003	SILENCER 1/4 E90A4003
13	1	36-00-0600/180	SEPARATORE DIAM. 54 AISI 316L LUNGH. 180MM	D 54 AISI 316L LUNGH. 180MM SEPARATOR
14	1	36-05-013	GHIERA SEPARATORE MCH36	SEPARATOR NUT MCH36
15	1	ROND/38/12,5	CAMPANA DIAM. 38 C/F D.12,5 IN ALL. SP. 1	D38 C/F D.12,5 IN ALL. SP. 1 WASHER
16	1	OR-2212/90	O-RING 2212 NBR 90 SHORT (53,67x1,78)	O-RING 2212 NBR 90 SHORT (53,67x1,78)
17	1	SC000492/C	PISTONE VALVOLA DI NON RITORNO	CHECK VALVE PISTON
18a	1	6-05-001A	MAN.0-400 BAR/PSI SENZA FLANGIA	MANOMETER 0-400 BAR MCH/6
18b	1	6-05-001A/600	MAN.0-600 BAR/PSI SENZA FLANGIA	MANOMETER 0-600 BAR MCH/6

SEPARATORE DI CONDENSA - CONDENSATE SEPARATOR

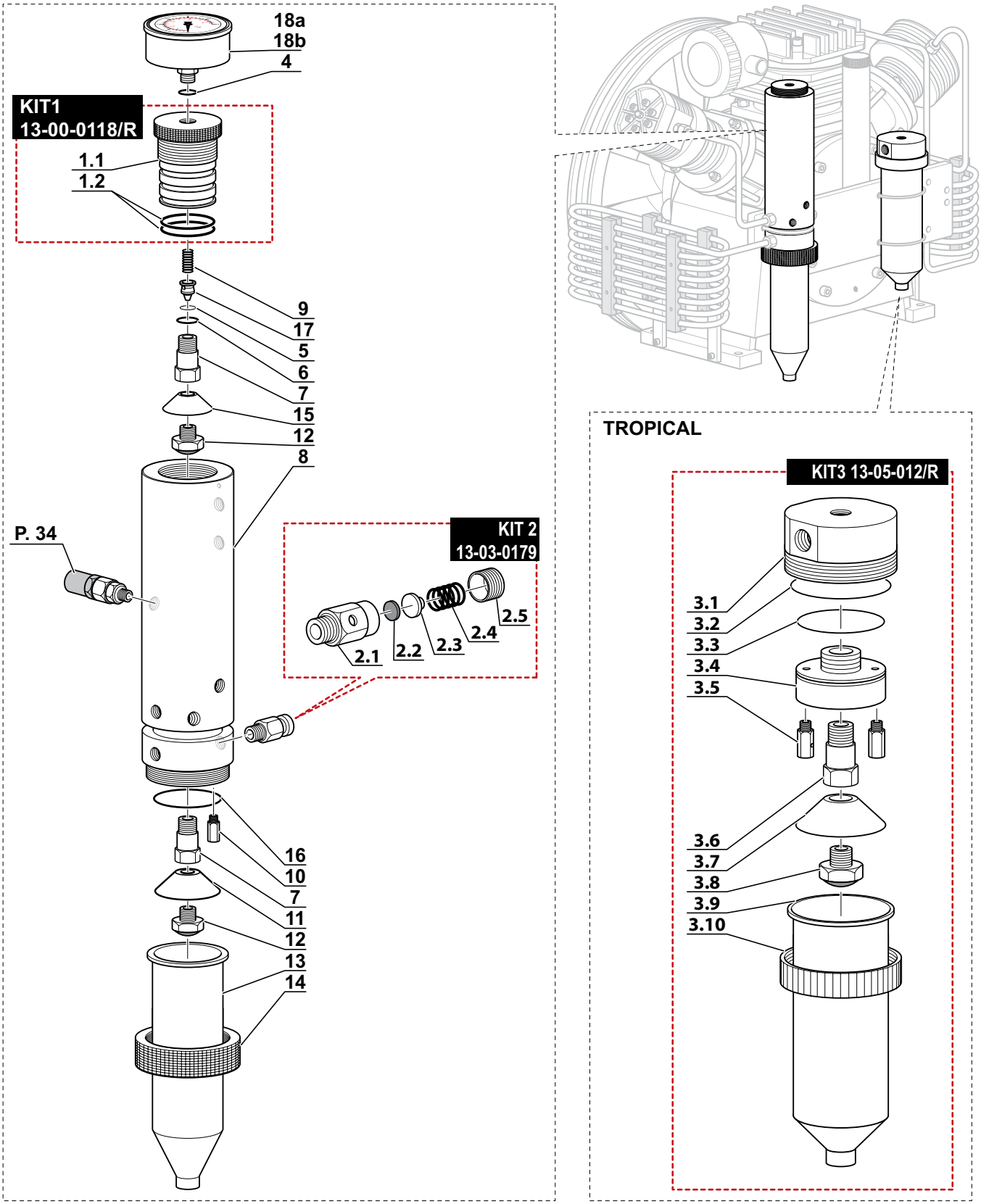

FILTRO CARBONI ATTIVI / SETACCIO MOLECOLARE
ACTIVE CARBON FILTER / MOLECULAR SIEVE

Rif. Pos.	Q.tà Q.ty	Codice Code	Descrizione	Description
KIT1	1	13-00-0097/R	KIT MAXIFILTRO CARBONI ATTIVI SETACCIO MOLECOLARE	ACTIVE CARBON MAXIFILTER MOLECULAR SIEVE KIT
1.1	1	13-00-0097	CORPO MAXI FILTRO	MAXI FILTER BODY
KIT2	1	13-00-0154/R	KIT TAPPO SUPERIORE MAXIFILTRO	MAXIFILTER TOP PLUG KIT
2.1	2	VITE0812E	VITE T.C.E. INOX 8X12 DIN 912	T.C.E. INOX 8X12 SCREW
2.2	1	VITE0830	VITE T.C.E. INOX 8X30 DIN912	SCREW T.C.E. INOX 8x30
2.3	1	13-00-0154	TAPPO SUPERIORE FILTRO	UPPER FILTER CAP
2.4	1	13-00-0156	TAPPO INTERNO FILTRO	INTERNAL FILTER CAP
2.5	2	13-00-0155	O-RING 6162 NBR90 (40.65x5,33)	O-R CAP FILTER
KIT3	1	SC000440	CART FILTRO FINALE MCH 13/16	AIR FILTER CARTRIDGE ACTIVE CARBON MCH13-16
3.1	1	13-00-0158	O-RING 3050 NBR 70(12.37x2.62)	O-R FILTER CARTRIDGE
3.2	1	13-00-0180	TAPPO CARTUCCIA FILTRO MCH13	FILTER CARTRIDGE CAP MCH13
3.3	1	13-01-0013	O-RING 3137 NBR70 (34.60x2.62)	O-RING 3137 NBR70 (34.60x2.62)
3.4	1	13-00-0188	MOLLA INTERNA CARTUCCIA FILTRO	INTERNAL SPRING FILTER CART.
3.5	3	13-00-0187	DISCO RETE INOX DIAM. 39mm	MESH DISK DIAM.39MM.
3.6	3	13-00-0189	DISCO FELTRO DIAMETRO 40mm	FELT DISK DIAM.40 MM. MCH13-16FOR FILTER CARTRIDGE
3.7	1	SC000350	CARBONE ATTIVO GRANULARE	ACTIVE CARBON
3.8	1	SC000380	SETACCIO MOLECOLARE	MOLECULAR SIEVE
3.9	1	13-05-0600	CORPO CARTUCCIA FILTRO MCH1316	CATRIDGE FILTER BODY MCH13/16
3.10	1	13-00-0191	ANELLO ELASTICO INOX CHIUSURA	ELASTIC RING FILTER CARTRIDGE MCH13-16
KIT4	1	13-00-0160/R	KIT TAPPO INFERIORE FILTRO MCH 13/16	LOWER FILTER CAP KIT
4.1	1	13-00-0155	O-RING 6162 NBR90 (40.65x5,33)	O-R CAP FILTER
4.2	1	13-00-0160	TAPPO INFERIORE FILTRO MCH 13/16	LOWER FILTER CAP

vedere listino accessori (*)
see accessories price list (*)

FILTRO CARBONI ATTIVI / SETACCIO MOLECOLARE
ACTIVE CARBON FILTER / MOLECULAR SIEVE

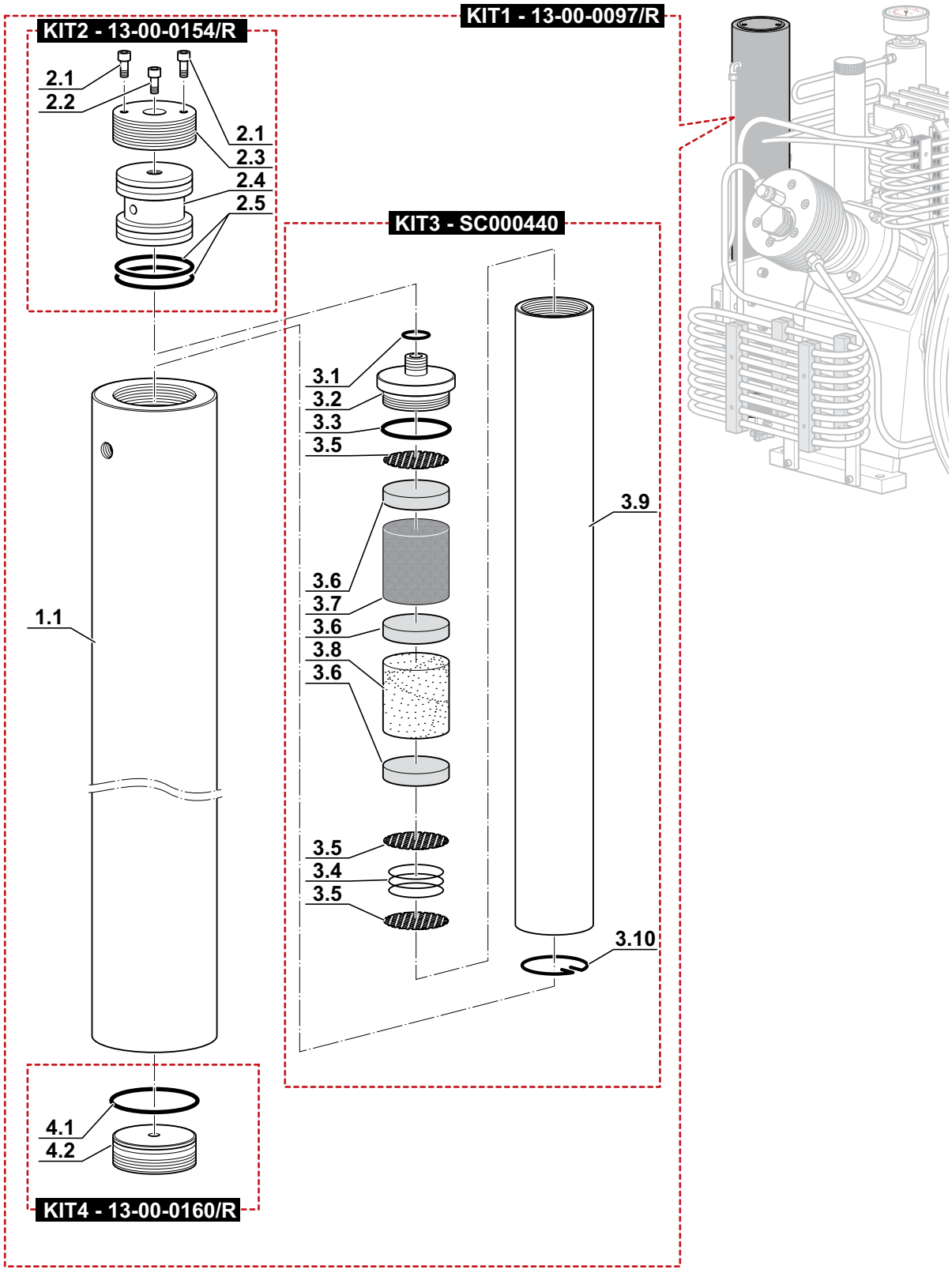

HYPERFILTER CARBONI ATTIVI / SETACCIO MOLECOLARE
ACTIVE CARBON HYPERFILTER / MOLECULAR SIEVE

Rif. Pos.	Q.tà Q.ty	Codice Code	Descrizione	Description
KIT1	1	36-07-034	KIT HYPERFILTER CARBONI ATTIVI	KIT ACTIVE CARBON HYPERFILTER
1.1	1	SC000547	TAPPO SUPERIORE SENZA SENSORE	UPPER PLUG WITHOUT SENSOR
1.2	2	36-07-031	O-RING 6250 NBR90 (62.87x5.34)	O-RING 6250 NBR90 (62.87x5.34)
1.3	1	36-07-034	CARTUCCIA HYPERFILTER AC/MS	HYPERFILTER AC/MS CARTRIDGE
1.4	1	36-07-033	O-RING 115 NBR 90 (11.91x2.62)	O-RING 115 NBR 90 (11.91x2.62)
1.5	1	36-07-032	O-RING 112 NBR 90 (9.92x2.62)	O-RING 112 NBR 90 (9.92x2.62)
1.6	1	SC000544	CORPO HYPER FILTER	HYPERFILTER BODY
1.7	1	SC000545	TAPPO INFERIORE HYPER FILTER	BOTTOM HYPER FILTER CAP - CPL W/O-RING
1.8	1	SC000553	MOLLA CARTUCCIA HYPER FILTER	HYPERFILTER CARTRIDGE SPRING
1.9	2	00-00-0000	VITE T.C.E. ZINCATA 10x16	SCREW T.C.E. ZINCATA 10x16

HYPERFILTER CARBONI ATTIVI / SETACCIO MOLECOLARE
ACTIVE CARBON HYPERFILTER / MOLECULAR SIEVE

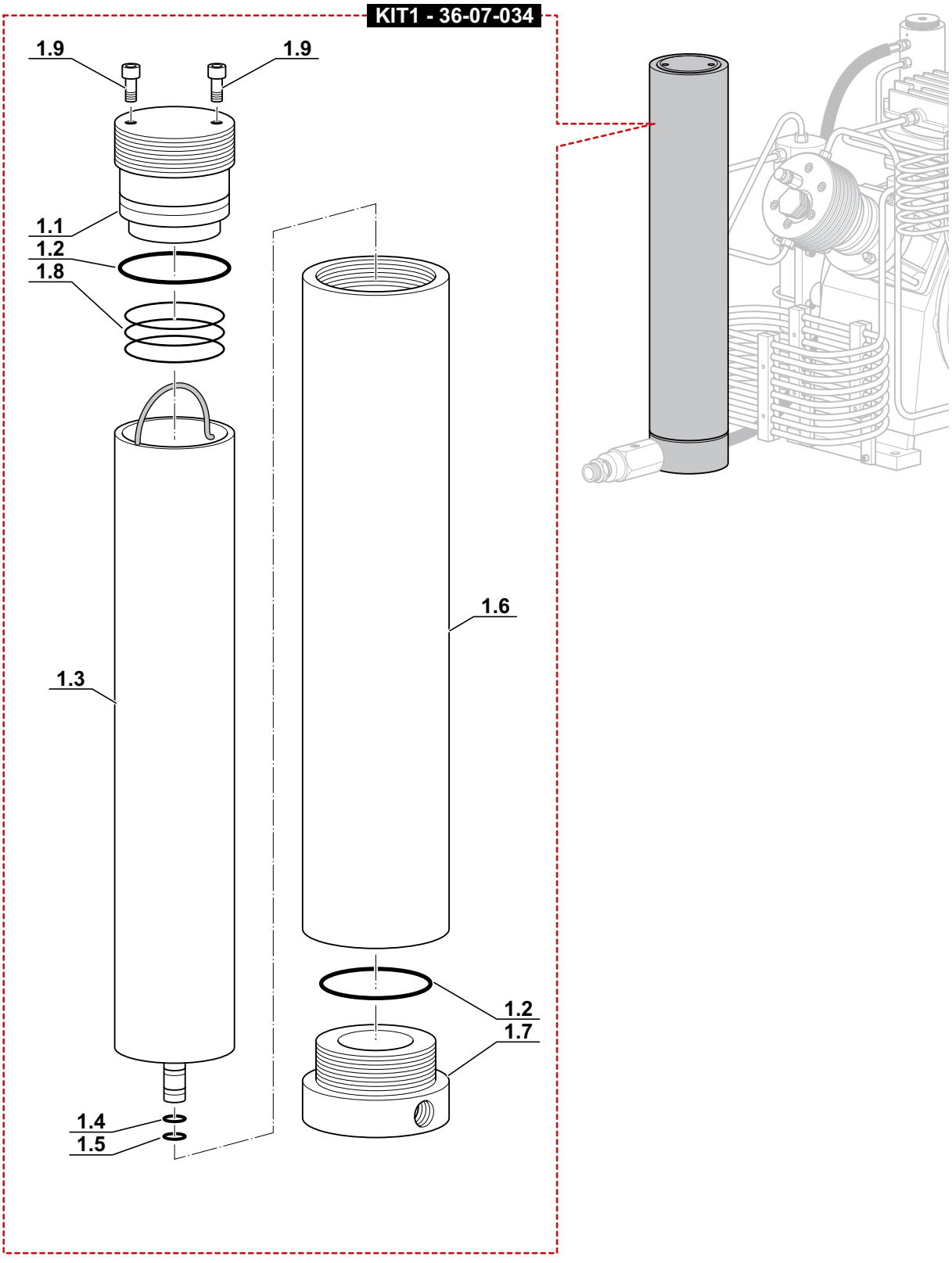

VALVOLA DI SICUREZZA - SAFETY VALVE

Rif. Pos.	Q.tà Q.ty	Codice Code	Descrizione	Description
KIT1	1	6-05-015	VALVOLA SIC.COMPLETA 225BAR	FINAL SECURITY VALVE 200 BAR GOLD MCH6/MCH13-16
1.1	1	6-05-015H	RACCORDO DIRITTO VALVOLA DI SICUREZZA	SAFETY VALVE FITTING 1/8'' NPT
1.2	1	OR-114	O RING 114 NBR 70 (11.11x1.78)	O RING 114 NBR 70 (11.11x1.78)
1.3	1	13-00-0171	MOLLA SEDE VALVOLA SICUREZZA	SAFETY VALVE SEAT SPRING
1.4	1	13-00-0170	SEDE NYLON VALVOLA SICUREZZA	NYLON SAFETY VALVE SEAT
1.5	1	13-00-0169	CORPO VALVOLA SICUREZZA	SAFETY VALVE BODY
1.6	1	OR-2015	O RING 2015 NBR 70 (3,69X1,78)	O RING 2015 NBR 70 (3,69X1,78)
1.7	1	13-00-0167	PISTONCINO VALVOLA SICUREZZA	SMALL SAFETY VALVE PISTON DIS. 2707
1.8	1	13-00-0166	MOLLA VALVOLA SICUREZZA	SAFETY VALVE SPRING
1.9	1	6-05-015A	CORPO ANT. REG. VALV.SIC225BAR	SAFETY VALVE 225BAR REGULATION FRONT BODY
KIT2a	1	6-05-015/1/8/300	VALVOLA SICUREZZA COMPLETA 1/8NPT x 300BAR	FINAL SECURITY VALVE 1/8NPT x 300BAR
KIT2b	1	6-05-015/1/8/330	VALVOLA SICUREZZA COMPLETA 1/8NPT x 330BAR	FINAL SECURITY VALVE 1/8NPT x 330BAR
2.1	1	36-06-0510/1/8	CORPO VALVOLA DI SICUREZZA MCH36	SAFETY VALVE BODY MCH36
2.2	1	36-06-0510-I	INSERTO OR VALVOLA DI SICUREZZA MCH36	SAFETY VALVE OR INSERT
2.3	1	OR-2012/90	OR 2012 NBR 90 SHORT (2.9x1.78)	OR 2012 NBR 90 SHORT (2.9x1.78)
2.4	1	36-06-0510-H	GHIERA INTERNA VALVOLA DI SIC. 3ST. MCH36	3ST SAFETY VALVE INNER RING
2.5	1	36-06-0510-L	PISTONE VALVOLA DI SICUREZZA	SAFETY VALVE PISTON
2.6	1	13-00-0157	DISTANZIALE MOLLA PISTONE VMP	VMP PISTON SPACER SPRING
2.7	1	13-00-0166	MOLLA VALVOLA DI SICUREZZA	SAFETY VALVE SPRING
2.8	1	13-00-0151/N	CAPPUCCIO VALVOLA DI MANTENIMENTO	MAINTENANCE VALVE CAP
2.9	1	13-00-0147/D/N	DADO VALVOLA DI MANTENIMENTO M20X1,5	MAINTENANCE VALVE NUT M20x1,5
KIT3a	1	6-05-015/1/4/300	VALVOLA SICUREZZA COMPLETA 1/4NPT x 300BAR	FINAL SECURITY VALVE 1/4NPT x 300BAR
KIT3b	1	6-05-015/1/4/330	VALVOLA SICUREZZA COMPLETA 1/4NPT x 330BAR	FINAL SECURITY VALVE 1/4NPT x 330BAR
KIT3c	1	6-05-015/1/4/420	VALVOLA SICUREZZA COMPLETA 1/4NPT x 420BAR	FINAL SECURITY VALVE 1/4NPT x 420BAR
3.1	1	36-06-0510/1/4	CORPO VALVOLA DI SICUREZZA MCH36 1/4	SAFETY VALVE BODY MCH36 1/4
3.2	1	36-06-0510-I	INSERTO OR VALVOLA DI SICUREZZA MCH36	SAFETY VALVE OR INSERT
3.3	1	OR-2012/90	OR 2012 NBR 90 SHORT (2.9x1.78)	OR 2012 NBR 90 SHORT (2.9x1.78)
3.4	1	36-06-0510-H	GHIERA INTERNA VALVOLA DI SIC. 3ST. MCH36	3ST SAFETY VALVE INNER RING
3.5	1	36-06-0510-L	PISTONE VALVOLA DI SICUREZZA	SAFETY VALVE PISTON
3.6	1	13-00-0157	DISTANZIALE MOLLA PISTONE VMP	VMP PISTON SPACER SPRING
3.7	1	13-00-0166	MOLLA VALVOLA DI SICUREZZA	SAFETY VALVE SPRING
3.8	1	13-00-0151/N	CAPPUCCIO VALVOLA DI MANTENIMENTO	MAINTENANCE VALVE CAP
3.9	1	13-00-0147/D/N	DADO VALVOLA DI MANTENIMENTO M20X1,5	MAINTENANCE VALVE NUT M20x1,5

VALVOLA MANTENIMENTO PRESSIONE - PRESSURE MAINTENANCE VALVE

Rif. Pos.	Q.tà Q.ty	Codice Code	Descrizione	Description
KIT1a	1	13-00-0127	VALVOLA DI MANTENIMENTO 1/8 - 1/4	MANTAINING PRESSURE VALVE MCH13/16 1/8 - 1/4
1.1	1	13-00-0147/N1	VITE VALVOLA MANTENIMENTO MCH 13/16	MAINTENANCE VALVE SCREW MCH13/16
1.2	2	OR-2025	O RING 2025 NBR 70 (6,07X1,78)	O RING 2025 NBR 70 (6,07X1,78)
1.3	1	13-00-0149/N	PISTONE VALVOLA MANTENIMENTO MCH 13/16	MAINTENANCE VALVE PISTON MCH13/16
1.4	1	13-00-0147D/N	DADO VALV. MANTENIMENTO PRESSIONE ALL. M20X1,5	VMP NUT M20X1,5
1.5	1	13-00-0147E	RONDELLA TEFLON PER PISTONE VMP	TEFLON RING VMP PISTON
1.6	1	13-00-0147/N/1/8NPT	CORPO VALVOLA MANTENIMENTO MCH 13/16 1/8NPT	MAINTENANCE VALVE BODY MCH13/16 1/8 NPT
1.7	1	13-00-0157	DISTANZIALE MOLLA PISTONE VPM	VMP PISTON SCREW SPACER
1.8	1	13-00-0166	MOLLA VALVOLA SICUREZZA	SAFETY VALVE SPRING
1.9	1	13-00-0151/N	CAPPUCCIO VALVOLA MANT.PRESS. ALL.	VMP CAP

VALVOLA DI SICUREZZA - VALVOLA MANTENIMENTO PRESSIONE
SAFETY VALVE - PRESSURE MAINTENANCE VALVE

VALVOLA DI SICUREZZA - SAFETY VALVE

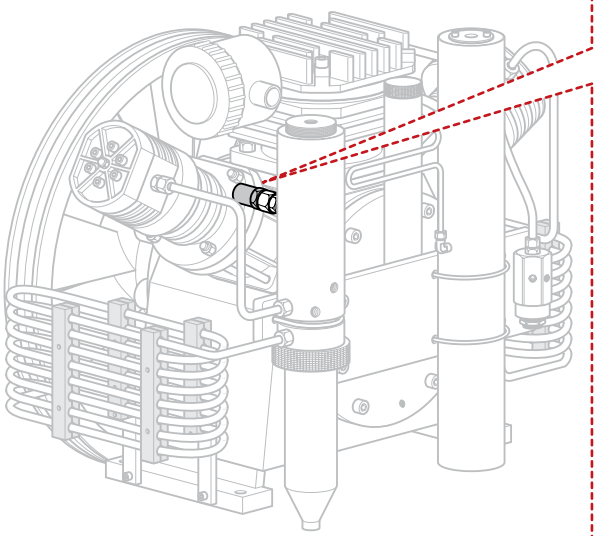

KIT1 (225 bar) - 6-05-015

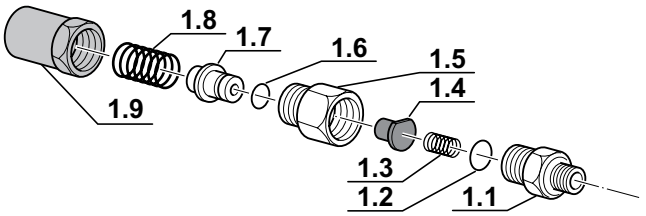

KIT2a (300bar) - 6-05-015/1/8/300
KIT2b (300bar) - 6-05-015/1/8/300

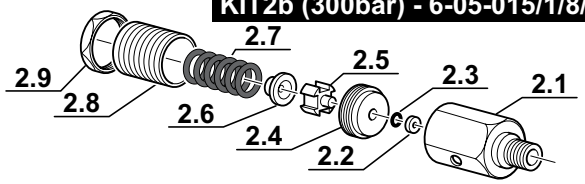

KIT3a (300bar) - 6-05-015/1/4/300
KIT3b (330bar) - 6-05-015/1/4/330
KIT3c (420bar) - 6-05-015/1/4/420

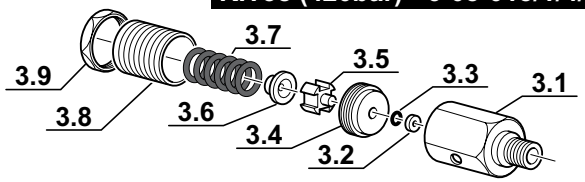

VALVOLA MANTENIMENTO PRESSIONE - PRESSURE MAINTENANCE VALVE

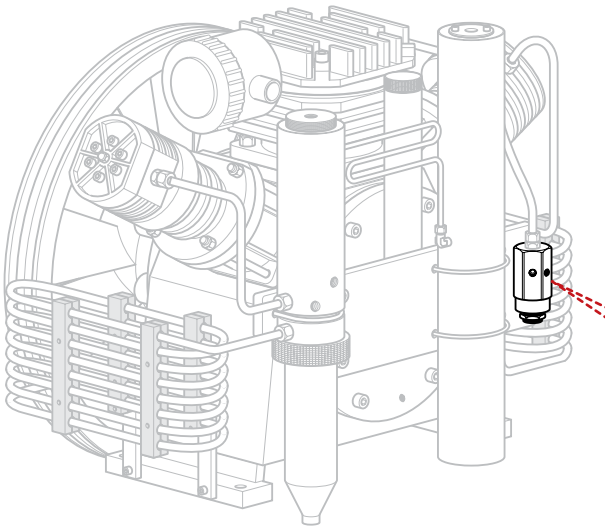

KIT 1a (1/8-1/4) - 13-00-0127

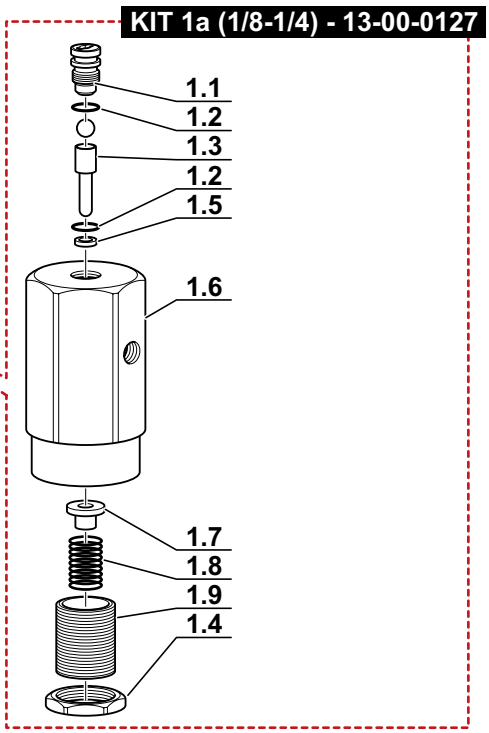

CIRCUITO DI FILTRAZIONE - FILTERING CIRCUIT

Mod: Standard - MiniTech

Rif. Pos.	Q.tà Q.ty	Codice Code	Descrizione	Description
KIT1	1	TUBO/MCH13/B/N/R	KIT TUBO COLLEGAM. FILTRO/SEP. (B)	SEPARATOR-FILTER TUBE CONNECTION13/16 KIT
1.1	2	13-00-0174E	RACCORDO 1/8 NPT TUBO 6mm	FITTING 1/8 NPT TUBE 6 mm
1.2	1	TUBO/MCH13/B/N	TUBO COLLEGAM. FILTRO/SEP. (B)	SEPARATOR-FILTER TUBE CONNECTION13/16
KIT2	1	13-04-0320/R	KIT TUBO COLLEG. FIL.VALV.MANT.(A)	FILTER-VMP TUBE CONNECTION MCH13/16 KIT
2.1	1	13-00-0174E	RACCORDO 1/8 NPT TUBO 6mm	FITTING 1/8 NPT TUBE 6 mm
2.3	1	13-00-0025E	RACCORDO 1/4 G -TUBO 6mm DIRITTO ERMETO	FITTING 1/4 G -TUBO 6mm ERMETO
2.2	1	13-04-0320	TUBO COLLEG. FIL.VALV.MANT.(A)	FILTER-VMP TUBE CONNECTION MCH13/16
2.4	1	GUAR1319	RONDELLA 1/4 IN RAME	COPPER WASHER 1/4
3	2	VITE0616	VITE 6X16 T.C.E. ZINC.	SCREW 6X16 T.C.E. ZINC.
4a	1	6-05-001A	MAN.0-400 BAR/PSI SENZA FLANGI	MANOMETER 0-400 BAR MCH/6
4b	1	6-05-001A/600	MAN.0-600 BAR/PSI SENZA FLANGI	MANOMETER 0-600 BAR MCH/6
5	2	13-00-0174	Racc. 1/8 NPT 7/16 Tubo 6 mm	STRAIGHT 1/8 PIPE FITTING 6

CIRCUITO DI FILTRAZIONE - FILTERING CIRCUIT
Mod: Standard - MiniTech

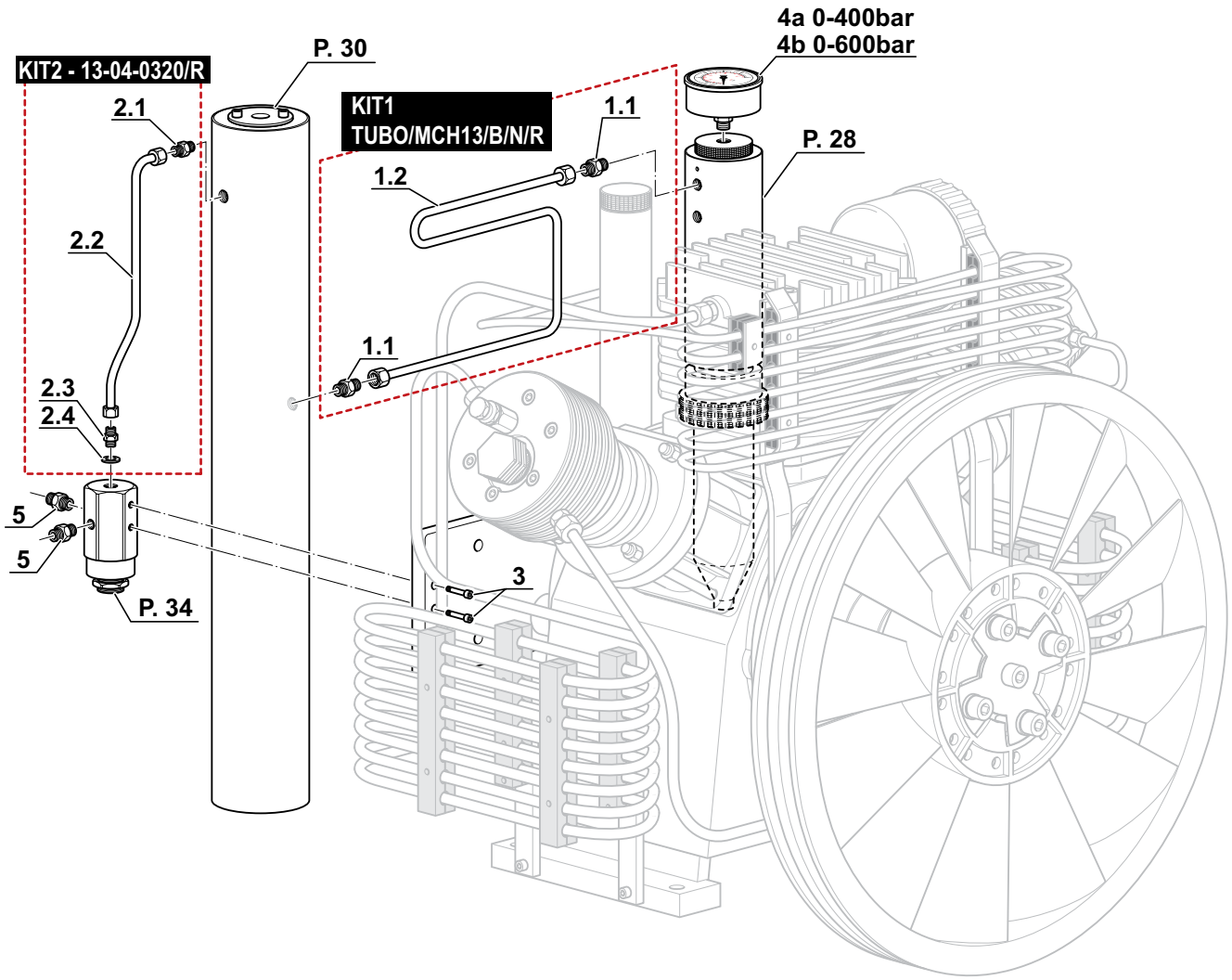

Distinta List	Modello Model	Colore Color	Codice Code
TELAIO **FRAME**	Standard SH	Blu	-
	Standard DL-DY	Blu	-
	Standard EM-ET	Blu	-
	Tech SH	Blu	-
	Tech DL-DY	Blu	-
	MiniTech SH	Blu	-
	MiniTech DL-DY	Blu	-
	Compact	Blu	-
	26-32 Compact	Blu	-
	Compact Evo	Blu	-
	Compact M	Blu	-
	Super Silent Evo	Blu	-
	Mini Silent	Blu	-
	Mark1-Mark2	Blu	-

Tavola	Drawing	Pag.
Livello olio	Oil level	40
Livello olio Mark1 - Mark2	Oil level Mark1 - Mark2	42
Circuito di filtrazione (Tech)	Filtering circuit (Tech)	44
Circuito di filtrazione (Compact - Compact M)	Filtering circuit (Compact - Compact M)	46
Circuito di filtrazione (Compact Evo)	Filtering circuit (Compact Evo)	48
Circuito di filtrazione (Mini Silent)	Filtering circuit (Mini Silent)	50
Circuito di filtrazione (Super Silent Evo)	Filtering circuit (Super Silent Evo)	52
Circuito di filtrazione (MCH-26-32/ET Compact)	Filtering circuit (MCH-26-32/ET Compact)	54
Circuito di filtrazione (Tech: Tropical-Tropical Plus)	Filtering circuit (Tech: Tropical-Tropical Plus)	56
Circuito di filtrazione (Super Silent Evo: Tropical)	Filtering circuit (Super Silent Evo: Tropical)	58
Circuito di filtrazione (Super Silent Evo: Tropical Plus)	Filtering circuit (Super Silent Evo: Tropical Plus)	60
Circuito di filtrazione (Mark1)	Filtering circuit (Mark1)	62
Circuito di filtrazione (Mark2)	Filtering circuit (Mark2)	64
Scarico condensa (Standard - Tech - MiniTech)	Condensate discharge (Standard - Tech - MiniTech)	66
Scarico condensa (Compact-Compact M-Compact Evo)	Condensate discharge (Compact-Compact M-Compact Evo)	68
Scarico condensa (Mini Silent)	Condensate discharge (Mini Silent)	70
Scarico condensa (Super Silent Evo)	Condensate discharge (Super Silent Evo)	72
Scarico condensa (MCH-26-32/ET Compact)	Condensate discharge (MCH-26-32/ET Compact)	74
Scarico condensa (Mark1-Mark2)	Condensate discharge (Mark1-Mark2)	76
Telaio (Standard SH)	Frame (Standard SH)	78
Telaio (Standard DL-DY)	Frame (Standard DL-DY)	80
Telaio (Standard EM-ET)	Frame (Standard EM-ET)	82
Telaio (Tech)	Frame (Tech)	84
Telaio (MiniTech SH)	Frame (MiniTech SH)	86
Telaio (MiniTech DL-DY)	Frame (MiniTech DL-DY)	88
Telaio (Compact)	Frame (Compact)	90
Telaio (26-32 Compact)	Frame (26-32 Compact)	92
Telaio (Compact Evo)	Frame (Compact Evo)	94
Telaio (Compact M)	Frame (Compact M)	96
Telaio (Super Silent Evo)	Frame (Super Silent Evo)	98
Telaio (Mini Silent)	Frame (Mini Silent)	100
Telaio (Mark1-Mark2)	Frame (Mark1-Mark2)	102
Targhette di sicurezza	Safety info label	104

LIVELLO OLIO - OIL LEVEL

Mod: Compact - Compact M - Compact Evo - MiniSilent - SuperSilent Evo - Tropical - MCH 26-32/ET Compact

	Rif. Pos.	Q.tà Q.ty	Codice Code	Descrizione	Description
1	1.1	2	13-00-0021	RACCORDO 90° 1/8 NPT	FITTING 90° 1/8 NPT
	1.2	1	13-00-0064	TUBO CONTROLLO LIVELLO OLIO	OIL LEVEL CHECK TUBE MCH13/16
	1.3	1	13-00-0139	TAPPO 1/8 NPT CIECO	PLUG 1/8 NPT
	1.4	1	13-04-0333	RACCORDO INFER. LIVELLO OLIO	LOWER OIL LEVEL FITTING
	1.5	2	FASC/2/10/18	FASCETTA STRING. 2 D10/18	CLAMP 2 D10/18
	1.6	2	13-00-0052A	RACCORDO G1/2 M. - PORTAGOMMA	FITTING G1/2 M.
	1.7	4	FASC/3B/17/29	FASCETTA STRING. 3B D.17/29	CLAMP 3B D.17/29
	1.8	2	13-00-0063/N	RACCORDO 1/2 PORTATUBO	1/2 CARRIER FITTING
	1.9	1	13-04-0339	RACCORDO A T 1/2" F	T FITTING 1/2" F
	1.10	1	13-04-0335	TUBO LIVELLO OLIO	OIL LEVEL TUBE
	1.11	2	13-04-0218	RACCORDO SUP. LIVELLO OLIO	OIL LEVEL UPPER FITTING
	1.12	2	GUAR-LIV-OLIO	GUARNIZIONE LIVEL.OLIO 10x20x3	10x20x3 OIL LEVEL GASKET
	1.13	2	13-00-0063/NPT	TAPPO OIL ALERT 1/2-14 NPT - MCH-13/16	OIL ALERT 1/2-14 NPT - MCH-13/16 PLUG
	1.14	1	13-04-0229	LIVELLO OLIO SLV/127/M10	OIL LEVEL SLV/127/M10
	1.15	1	RACC-2501-1/2	RACCORDO M-M 1/2"	FITTING M-M 1/2"
	1.16	1	13-04-0230	RUBINETTO SCARICO OLIO MCH13/16	OIL DRAIN VALVE MCH13/16
	1.17	1	13-00-0053	GUARNIZIONE RAME 21,5x28x1,5	COPPER GASKET 21,5x28x1,5
	1.18	1	13-04-0231	TAPPO 1/2" SCARICO OLIO	OIL DRAIN PLUG 1/2"
	1.19	1	13-04-0342	TUBO SCARICO OLIO MCH13/16 COMPACT	OIL DRAIN TUBE MCH13/16 COMPACT
2	2.1	2	13-00-0021	RACCORDO 90° 1/8 NPT	FITTING 90° 1/8 NPT
	2.2	1	13-00-0064	TUBO CONTROLLO LIVELLO OLIO	OIL LEVEL CHECK TUBE MCH13/16
	2.3	1	13-00-0139	TAPPO 1/8 NPT CIECO	PLUG 1/8 NPT
	2.4	2	RACC20031/2	RACCORDO A T FxFxF 1/2	T FITTING FxFxF 1/2
	2.5	1	13-00-0053	GUARNIZIONE RAME 21,5x28x1,5	COPPER GASKET 21,5x28x1,5
	2.6	2	13-00-0052A	RACCORDO G1/2 M. - PORTAGOMMA	FITTING G1/2 M.
	2.7	4	FASC/3B/17/29	FASCETTA STRING. 3B D.17/29	CLAMP 3B D.17/29
	2.8	1	13-04-0333	RACCORDO INFER. LIVELLO OLIO	LOWER OIL LEVEL FITTING
	2.9	1	13-04-0339	RACCORDO A T 1/2" F	T FITTING 1/2" F
	2.10	2	13-04-0338	RIDUZIONE 1/4 F - 1/2 M	REDUCTION 1/4 F - 1/2 M
	2.11	2	13-04-0218	RACCORDO SUP. LIVELLO OLIO	OIL LEVEL UPPER FITTING
	2.12	2	GUAR-LIV-OLIO	GUARNIZIONE LIVEL.OLIO 10x20x3	10x20x3 OIL LEVEL GASKET
	2.13	2	13-00-0063/NPT	TAPPO OIL ALERT 1/2-14 NPT - MCH-13/16	OIL ALERT 1/2-14 NPT - MCH-13/16 PLUG
	2.14	1	13-04-0229	LIVELLO OLIO SLV/127/M10	OIL LEVEL SLV/127/M10
	2.15	1	TAPPO/OLIO/3/4	TAPPO OLIO 3/4 NERO	OIL PLUG 3/4 BLACK
	2.16	1	13-04-0230	RUBINETTO SCARICO OLIO MCH13/16	OIL DRAIN VALVE MCH13/16
	2.17	1	RACC/3/4-1/2	RACCORDO F 3/4 F 1/2 X TAPPO	PLUG F 3/4 F 1/2 X FITTING
	2.18	1	13-04-0231	TAPPO 1/2" SCARICO OLIO	OIL DRAIN PLUG 1/2"
	2.19	1	13-04-0342	TUBO SCARICO OLIO MCH13/16 COMPACT	OIL DRAIN TUBE MCH13/16 COMPACT
	2.20	1	13-04-0335	TUBO LIVELLO OLIO	OIL LEVEL TUBE
	2.21	1	13-00-0063/N	RACCORDO 1/2 PORTATUBO	1/2 CARRIER FITTING
	2.22a	1	T-SP-16X23-750	TUBO SPIRALATO PER ALIMENTI 16X23 L=750	FOOD SPIRAL HOSE 16X23 L=750
	2.22b	1	T-SP-16X23-1400	TUBO SPIRALATO PER ALIMENTI 16X23 L=1400	FOOD SPIRAL HOSE 16X23 L=1400
	2.23	2	FASC/2/10/18	FASCETTA STRING. 2 D10/18	CLAMP 2 D10/18
	2.24	2	RACC-2501-1/2	RACCORDO M-M 1/2"	FITTING M-M 1/2"

LIVELLO OLIO - OIL LEVEL

Mod: Compact - Compact M - Compact Evo - MiniSilent - SuperSilent Evo - Tropical - MCH 26-32/ET Compact

Model: Compact - Compact M - Compact Evo - MiniSilent - SuperSilent Evo - Tropical **1**

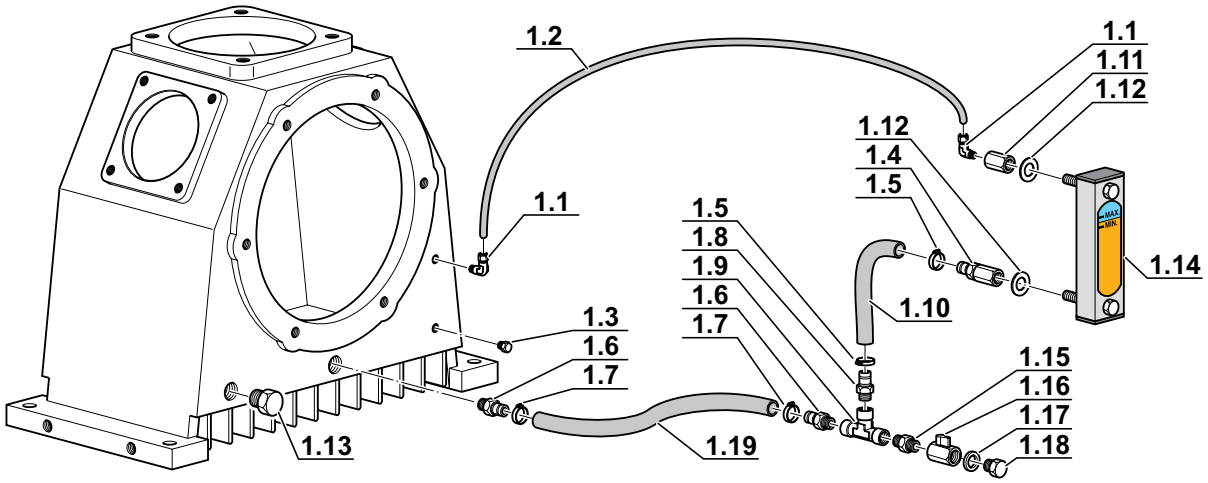

Model: MCH 26-32/ET Compact **2**

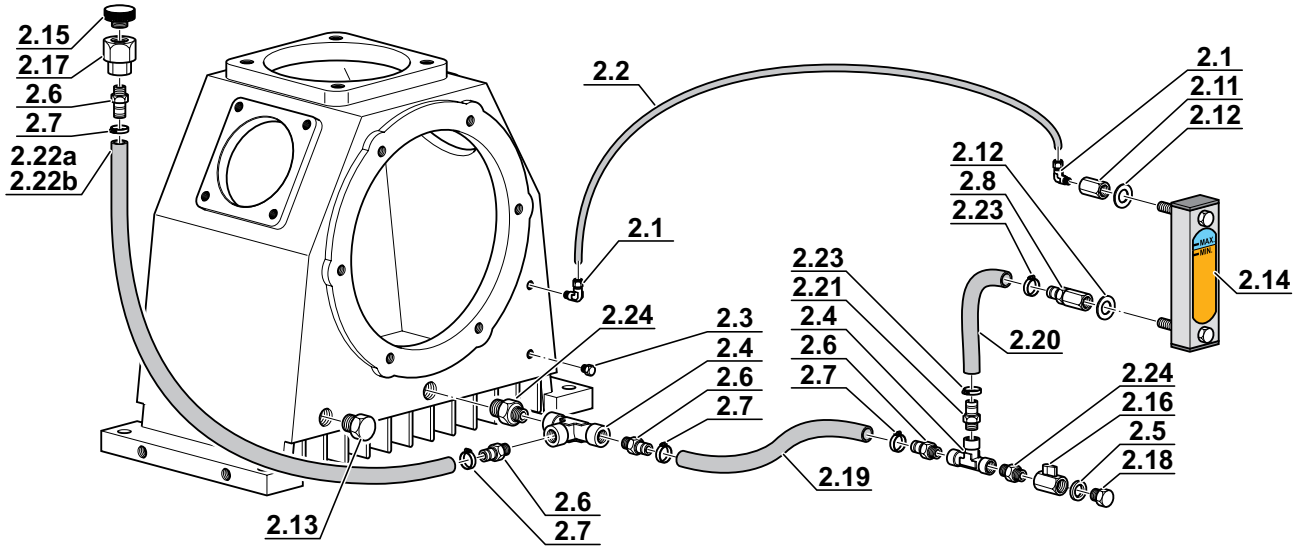

LIVELLO OLIO - OIL LEVEL

Mod: Mark1 - Mark2

	Rif. Pos.	Q.tà Q.ty	Codice Code	Descrizione	Description
3	3.1	1	13-00-0090	TAPPO 1/2 (ROSSO) CARICO OLIO CON SFIATO MCH13/16	OIL FILLING CAP 1/2 (RED) MCH13/16 WITH BREATHER
	3.2	1	13-00-0065A	RACCORDO SUPERIORE TUBO CARICO OLIO MCH13/16	HIGHER OIL CHARGE TUBE FITTING MCH13/16
	3.3	1	13-00-0065	RACCORDO INFERIORE TUBO CARICO OLIO MCH13/16	LOWER OIL CHARGE TUBE FITTING MCH13/16
	3.4	1	13-00-0076	TUBO CARICO OLIO MCH13-16	OIL FILLING TUBE MCH13/16
	3.5	1	13-00-0139	TAPPO 1/8 NPT CIECO	PLUG 1/8 NPT
	3.6	0,3	TUBRILSAN6X4	TUBO RILSAN 6x4	RILSAN HOSE 6x4
	3.7	2	13-00-0061	O-RING 3137 NBR70 (34.60x2.62) CARICO OLIO	O-RING TUBE OIL CHARGE NBR 70 (34,6X2,62)
	3.8	2	13-00-0021	RACCORDO 90° 1/8 NPT	FITTING 90° 1/8 NPT
	3.9	1	RACC20201/2	RACCORDO 90° 1/2F-1/2M	FITTING 90° 1/2F-1/2M
	3.10	1	13-00-0144	RACCORDO 90° 1/8 - TUBO 6mm	FITTING 90° 1/8 - TUBO 6mm
	3.11	1	13-00-0035	RACCORDO DIRITTO 1/4 TUBO 8mm	STRAIGHT FITTING 1/4 TUBE 8MM
	3.12	1	13-03-0025/TR	TUBO INOX 6x1 MCH-13-16 TROPICAL PLUS SCARICO OLIO	SS TUBE 6x1 MCH-13-16 TROPICAL PLUS OIL DRAIN
	3.13	1	13-00-0025E	RACCORDO 1/4 G -TUBO 6mm DIRITTO ERMETO	FITTING 1/4 G -TUBO 6mm ERMETO
	3.14	1	VITE0512Z	VITE T.C.E. ZINC. 5X12	SCREW T.C.E. ZINC. 5X12
	3.15	1	36-06-004	TAPPO FILTRO OLIO MCH36	MCH-36 OIL FILTER PLUG
	3.16	1	13-00-0061	O-RING 3137 NBR70 (34.60x2.62)	O-RING 3137 NBR70 (34.60x2.62)
	3.17	1	36-06-006	FILTRO OLIO MCH36	OIL FILTER MCH36
	3.18	1	36-06-007	CARTER FILTRO OLIO MCH36	OIL FILTER CARTER
	3.19	1	RACC25301/41/8	RACCORDO 2530 1/4 1/8	FITTING 2530 1/4 1/8
	3.20	1	36-06-009	POMPA OLIO MCH36	OIL PUMP MCH36
	3.21	4	36-06-010	VITE TCEIZN M5x50-8.8 MCH36	TCEIZN M5x50-8.8 MCH36 SCREW
	3.22	1	36-06-019/T	GIUNTO POMPA OLIO MCH13/16 PER TROPICAL	OIL PUMP COUPLING MCH13/16 TROPICAL
	3.23	1	SPINA/3,5x26	SPINA ELASTICA 3,5x26	PIN 3,5x26
	3.24	1	RIDUZIONE/E2151004	RIDUZIONE MASCHIO FEMMINA CIL. E2151004 1/2 1/4	M-F 1/2 1/4 REDUCTION
	3.25	1	13-03-0024/TR	TUBO INOX 8x1 MCH-13-16 TROPICAL PLUS RACC.SCAR. OLIO-POMPA	SS TUBE 8x1 MCH-13-16 TROPICAL PLUS DRAIN FITTING-OIL PUMP
	3.26	1	13-00-0063/NPT	TAPPO OIL ALERT 1/2-14 NPT - MCH-13/16	OIL ALERT 1/2-14 NPT - MCH-13/16 PLUG
	3.27	1	RACC20701/2	RACCORDO A T FXFXM 1/2	T FITTING FXFXM 1/2
	3.28	1	13-00-0063/N	RACCORDO 1/2 PORTATUBO	1/2 CARRIER FITTING
	3.29	2	FASC/2/10/18	FASCETTA STRING. 2 D10/18	CLAMP 2 D10/18
	3.30	1	13-04-0335	TUBO LIVELLO OLIO	OIL LEVEL TUBE
	3.31	1	13-04-0333	RACCORDO INFER. LIVELLO OLIO	LOWER OIL LEVEL FITTING
	3.32	2	GUAR-LIV-OLIO	GUARNIZIONE LIVEL.OLIO 10x20x3	10x20x3 OIL LEVEL GASKET
	3.33	1	13-04-0218	RACCORDO SUP. LIVELLO OLIO	OIL LEVEL UPPER FITTING
	3.34	1	13-04-0229	LIVELLO OLIO SLV/127/M10	OIL LEVEL SLV/127/M10

LIVELLO OLIO - OIL LEVEL

Mod: Mark1 - Mark2

Model: Mark1 - Mark2 **3**

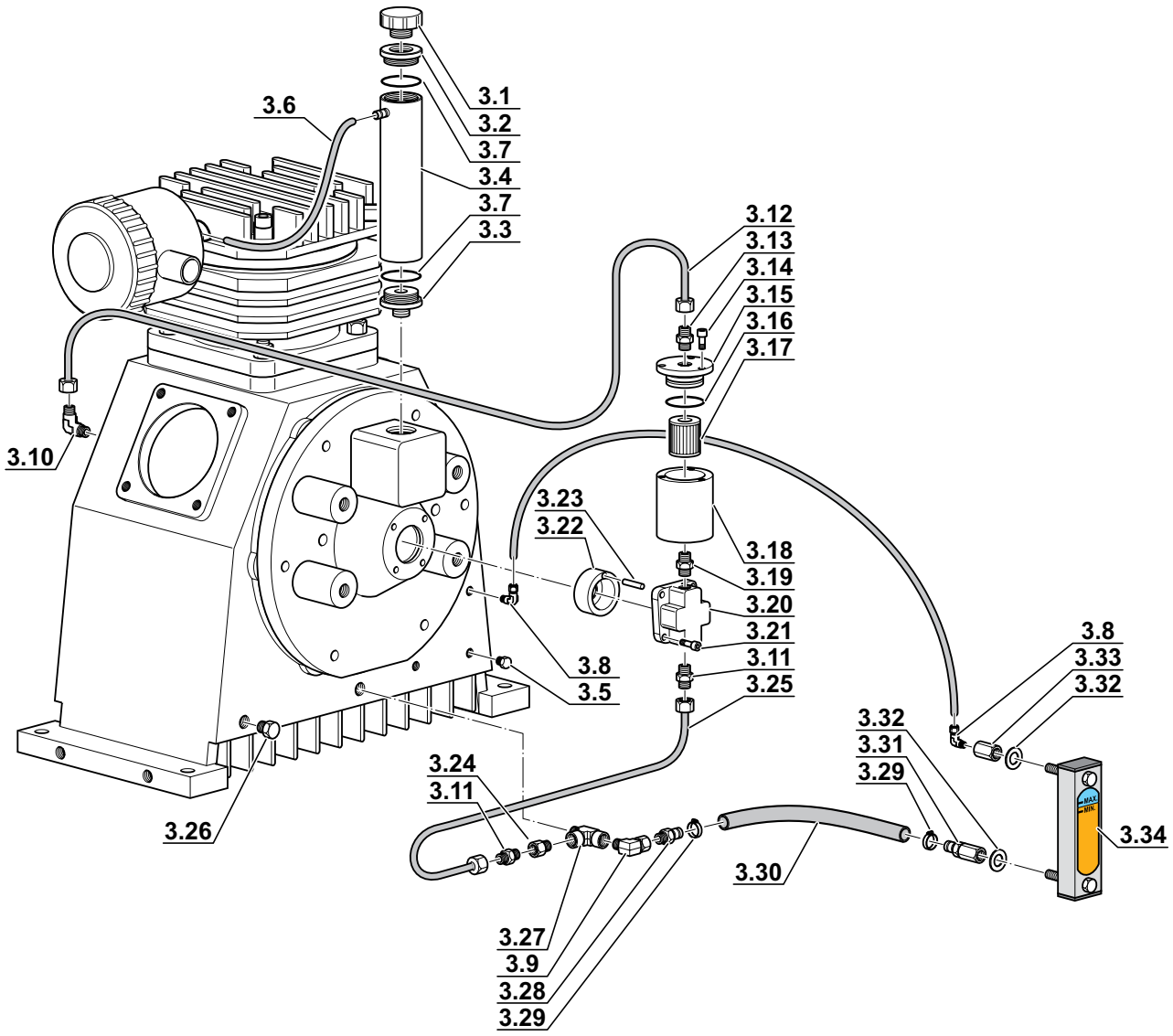

CIRCUITO DI FILTRAZIONE - FILTERING CIRCUIT

Mod: Tech

Rif. Pos.	Q.tà Q.ty	Codice Code	Descrizione	Description
KIT1	1	TUBO/MCH13/B/N/R	KIT TUBO COLLEGAM. FILTRO/SEP. (B)	SEPARATOR-FILTER TUBE CONNECTION13/16 KIT
1.1	2	13-00-0174E	RACCORDO 1/8 NPT TUBO 6mm	FITTING 1/8 NPT TUBE 6 mm
1.2	1	TUBO/MCH13/B/N	TUBO COLLEGAM. FILTRO/SEP. (B)	SEPARATOR-FILTER TUBE CONNECTION13/16
KIT2	1	13-04-0320/R	KIT TUBO COLLEG. FIL.VALV.MANT.(A)	FILTER-VMP TUBE CONNECTION MCH13/16 KIT
2.1	1	13-00-0174E	RACCORDO 1/8 NPT TUBO 6mm	FITTING 1/8 NPT TUBE 6 mm
2.3	1	13-00-0025E	RACCORDO 1/4 G -TUBO 6mm DIRITTO ERMETO	FITTING 1/4 G -TUBO 6mm ERMETO
2.2	1	13-04-0320	TUBO COLLEG. FIL.VALV.MANT.(A)	FILTER-VMP TUBE CONNECTION MCH13/16
2.4	1	GUAR1319	RONDELLA 1/4 IN RAME	COPPER WASHER 1/4
3	1	13-00-0084	VITE 6X15 T.C.E. ZINC.	SCREW 6X15 T.C.E. ZINC.
4	3	13-00-0139	TAPPO 1/8 NPT CIECO	PLUG 1/8 NPT
5	3	DA003I	DADO INOX AUTOBLOC. M3	SELF LOCKING NUT M3 INOX
6	3	36-07-006	VITE TCEI M3x10 INOX MCH36	SCREW TCEI M3x10 INOX MCH36
7	1	13-00-0025	RACCORDO 1/4 NPT -TUBO 6mm DIRITTO 7/16	STRAIGHT FITTING 1/4 TUBE 6MM 7/16
8	1	13-00-0174	Racc. 1/8 NPT 7/16 Tubo 6 mm	STRAIGHT 1/8 PIPE FITTING 6
9	2	13-00-0137	DADO ZINCATO AUTOBLOC. M6 ALTO	SELF LOCKING NUT M6 HIGH
10	4	RON6I	RONDELLA PIANA M6 INOX DIN125	FLAT WASHER M6 INOX DIN125
11	2	VITE0645I	VITE T.C.E. INOX 6x45	SCREW T.C.E. INOX 6x45
12	1	13-04-0217	BLOCCHETTO ALLUMINIO RAMPA DI RICARICA	RECHARGE ALUMINIUM BLOCK
13	1	13-04-0285/AIR	TUBO HP R8 800mm AIR	HP R8 800mm AIR TUBE
14	3	13-00-0144	RACCORDO 90° 1/8 - 7/16 TUBO 6mm	FITTING 90° 1/8 - TUBO 6mm
15	2	RON10I	RONDELLA PIANA M10 INOX DIN125	FLAT WASHER M10 INOX DIN125
16	1	13-04-0213	MICROTUBO 1/4-7/16 400mm	MICRO-HOSE 1/4-7/16 400mm MANOMETER HOLDER
17	1	13-04-0211	MANOMETRO 0-400BAR CON FLANGIA	MANOMETER 0-400BAR W/FLANGE

CIRCUITO DI FILTRAZIONE - FILTERING CIRCUIT
Mod: Tech

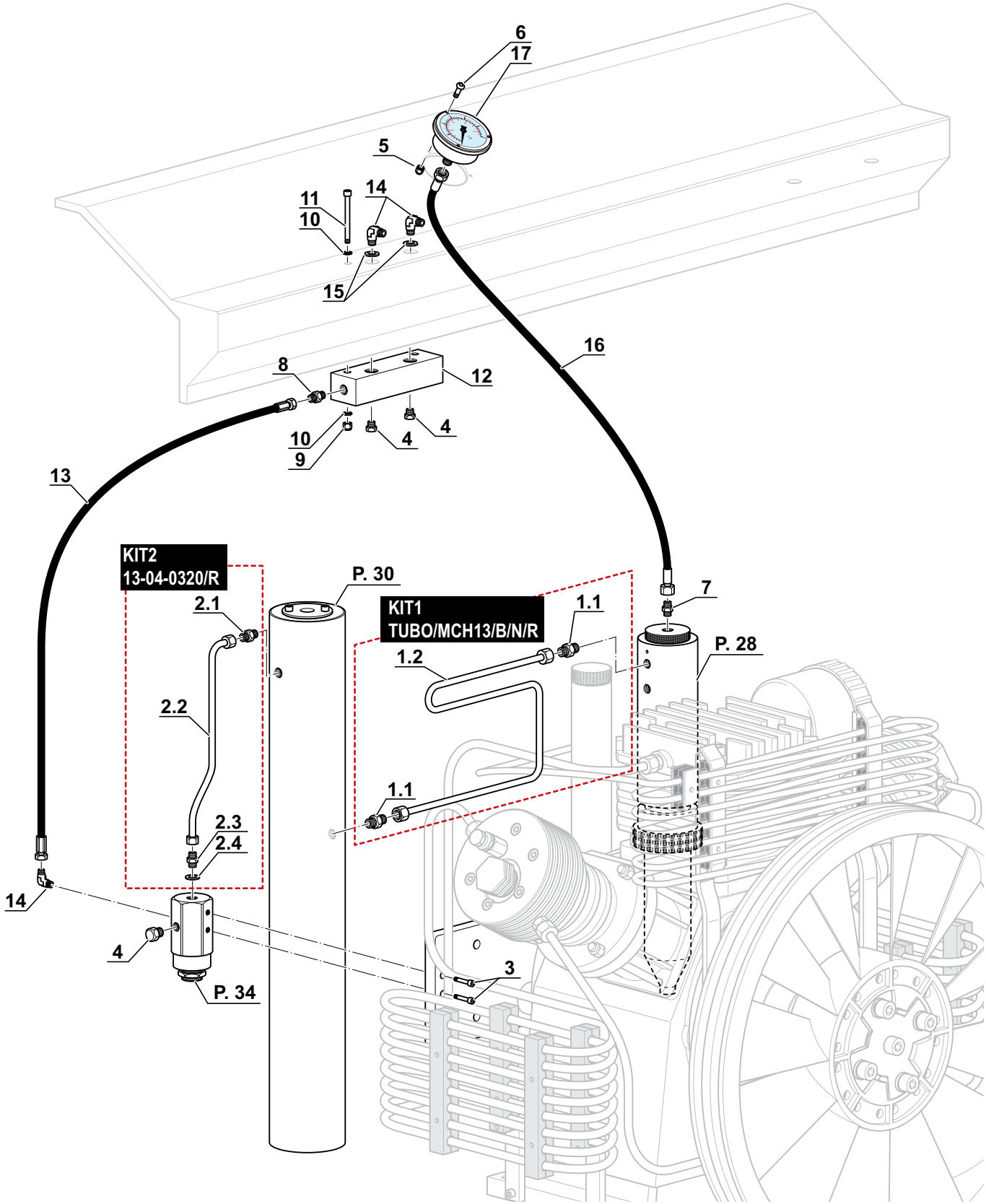

CIRCUITO DI FILTRAZIONE - FILTERING CIRCUIT

Mod: Compact, Compact M

Rif. Pos.	Q.tà Q.ty	Codice Code	Descrizione	Description
KIT1	1	TUBO/MCH13/B/N/R	KIT TUBO COLLEGAM. FILTRO/SEP. (B)	SEPARATOR-FILTER TUBE CONNECTION13/16 KIT
1.1	2	13-00-0174E	RACCORDO 1/8 NPT TUBO 6mm	FITTING 1/8 NPT TUBE 6 mm
1.2	1	TUBO/MCH13/B/N	TUBO COLLEGAM. FILTRO/SEP. (B)	SEPARATOR-FILTER TUBE CONNECTION13/16
KIT2	1	13-04-0320/R	KIT TUBO COLLEG. FIL.VALV.MANT.(A)	FILTER-VMP TUBE CONNECTION MCH13/16 KIT
2.1	1	13-00-0174E	RACCORDO 1/8 NPT TUBO 6mm	FITTING 1/8 NPT TUBE 6 mm
2.3	1	13-00-0025E	RACCORDO 1/4 G -TUBO 6mm DIRITTO ERMETO	FITTING 1/4 G -TUBO 6mm ERMETO
2.2	1	13-04-0320	TUBO COLLEG. FIL.VALV.MANT.(A)	FILTER-VMP TUBE CONNECTION MCH13/16
2.4	1	GUAR1319	RONDELLA 1/4 IN RAME	COPPER WASHER 1/4
3	1	13-00-0084	VITE 6X15 T.C.E. ZINC.	SCREW 6X15 T.C.E. ZINC.
4	1	36-05-00240	MICROTUBO 1/4-7/16 L.300 mm	MICRO-HOSE 1/4-7/16 300mm MANOMETER HOLDER
5a	1	SC000310	PRESSOSTATO CON MICRO 280 BAR	PRESSURE SWITCH MICRO 280 BAR
5b	1	SC000315	PRESSOSTATO CON MICRO 330BAR	PRESSURE SWITCH MICRO 330BAR
6	2	13-00-0139	TAPPO 1/8 NPT CIECO	PLUG 1/8 NPT
7	1	13-00-0025	RACCORDO 1/4 NPT -TUBO 6mm DIRITTO 7/16	STRAIGHT FITTING 1/4 TUBE 6MM 7/16
8	1	13-00-0174	Racc. 1/8 NPT 7/16 Tubo 6 mm	STRAIGHT 1/8 PIPE FITTING 6
9	2	13-00-0137	DADO ZINCATO AUTOBLOC. M6 ALTO	SELF LOCKING NUT M6 HIGH
10	4	RON6I	RONDELLA PIANA M6 INOX DIN125	FLAT WASHER M6 INOX DIN125
11	2	VITE0645I	VITE T.C.E. INOX 6x45	SCREW T.C.E. INOX 6x45
12	1	13-04-0217	BLOCCHETTO ALLUMINIO RAMPA DI RICARICA	RECHARGE ALUMINIUM BLOCK
13	1	13-04-0285/AIR	TUBO HP R8 800mm AIR	HP R8 800mm AIR TUBE
14	1	13-00-0144	RACCORDO 90° 1/8 - 7/16 TUBO 6mm	FITTING 90° 1/8 - TUBO 6mm
15	2	RON10I	RONDELLA PIANA M10 INOX DIN125	FLAT WASHER M10 INOX DIN125
16	1	13-04-0213	MICROTUBO 1/4-7/16 400mm	MICRO-HOSE 1/4-7/16 400mm MANOMETER HOLDER
17	1	13-04-0211	MANOMETRO 0-400BAR CON FLANGIA	MANOMETER 0-400BAR W/FLANGE
18	3	36-07-006	VITE TCEI M3x10 INOX MCH36	SCREW TCEI M3x10 INOX MCH36
19	3	DA003I	DADO INOX AUTOBLOC. M3	SELF LOCKING NUT M3 INOX

CIRCUITO DI FILTRAZIONE - FILTERING CIRCUIT
Mod: Compact, Compact M

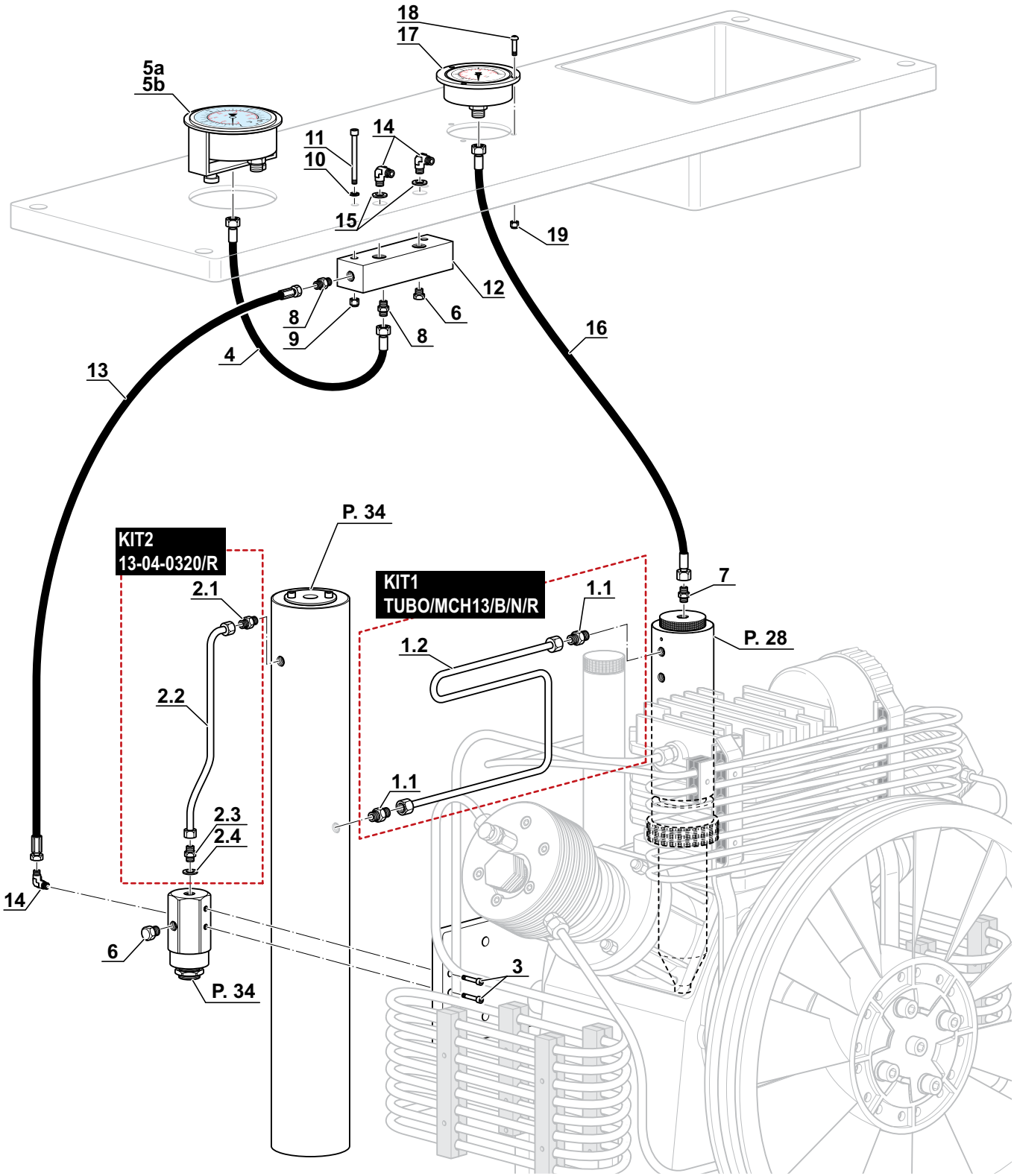

CIRCUITO DI FILTRAZIONE - FILTERING CIRCUIT

Mod: Compact Evo

Rif. Pos.	Q.tà Q.ty	Codice Code	Descrizione	Description
KIT1	1	TUBO/MCH13/B/N/R	KIT TUBO COLLEGAM. FILTRO/SEP. (B)	SEPARATOR-FILTER TUBE CONNECTION13/16 KIT
1.1	2	13-00-0174E	RACCORDO 1/8 NPT TUBO 6mm	FITTING 1/8 NPT TUBE 6 mm
1.2	1	TUBO/MCH13/B/N	TUBO COLLEGAM. FILTRO/SEP. (B)	SEPARATOR-FILTER TUBE CONNECTION13/16
KIT2	1	13-04-0320/R	KIT TUBO COLLEG. FIL.VALV.MANT.(A)	FILTER-VMP TUBE CONNECTION MCH13/16 KIT
2.1	1	13-00-0174E	RACCORDO 1/8 NPT TUBO 6mm	FITTING 1/8 NPT TUBE 6 mm
2.3	1	13-00-0025E	RACCORDO 1/4 G -TUBO 6mm DIRITTO ERMETO	FITTING 1/4 G -TUBO 6mm ERMETO
2.2	1	13-04-0320	TUBO COLLEG. FIL.VALV.MANT.(A)	FILTER-VMP TUBE CONNECTION MCH13/16
2.4	1	GUAR1319	RONDELLA 1/4 IN RAME	COPPER WASHER 1/4
3	2	13-00-0084	VITE 6X15 T.C.E. ZINC.	SCREW 6X15 T.C.E. ZINC.
4	1	13-05-0120	MAN.0-16 BAR/PSI CON FLANGIA	FLANGED PRESSURE GAUGE 0-16 BAR/PSI
5	1	13-05-0130	MAN.0-100 BAR/PSI CON FLANGIA	FLANGED PRESSURE GAUGE 0-100 BAR/PSI
6	2	13-00-0139	TAPPO 1/8 NPT CIECO	PLUG 1/8 NPT
7	1	13-00-0025	RACCORDO 1/4 NPT -TUBO 6mm DIRITTO 7/16	STRAIGHT FITTING 1/4 TUBE 6MM 7/16
8	1	13-00-0174	Racc. 1/8 NPT 7/16 Tubo 6 mm	STRAIGHT 1/8 PIPE FITTING 6
9	2	13-00-0137	DADO ZINCATO AUTOBLOC. M6 ALTO	SELF LOCKING NUT M6 HIGH
10	4	RON6I	RONDELLA PIANA M6 INOX DIN125	FLAT WASHER M6 INOX DIN125
11	2	VITE0645I	VITE T.C.E. INOX 6x45	SCREW T.C.E. INOX 6x45
12	1	13-04-0217	BLOCCHETTO ALLUMINIO RAMPA DI RICARICA	RECHARGE ALUMINIUM BLOCK
13	1	13-04-0285/AIR	TUBO HP R8 800mm AIR	HP R8 800mm AIR TUBE
14	1	13-00-0144	RACCORDO 90° 1/8 - 7/16 TUBO 6mm	FITTING 90° 1/8 - TUBO 6mm
15	3	RON10I	RONDELLA PIANA M10 INOX DIN125	FLAT WASHER M10 INOX DIN125
16	1	13-04-0213	MICROTUBO 1/4-7/16 400mm	MICRO-HOSE 1/4-7/16 400mm MANOMETER HOLDER
17	1	13-04-0211	MANOMETRO 0-400BAR CON FLANGIA	MANOMETER 0-400BAR W/FLANGE
18	3	36-07-006	VITE TCEI M3x10 INOX MCH36	SCREW TCEI M3x10 INOX MCH36
19	9	DA003I	DADO INOX AUTOBLOC. M3	SELF LOCKING NUT M3 INOX
20	1	36-05-00240	MICROTUBO 1/4-7/16 L.300 mm	MICRO-HOSE 1/4-7/16 300mm MANOMETER HOLDER
21a	1	SC000310	PRESSOSTATO CON MICRO 280 BAR	PRESSURE SWITCH MICRO 280 BAR
21b	1	SC000315	PRESSOSTATO CON MICRO 330BAR	PRESSURE SWITCH MICRO 330BAR
22	1	13-04-0214	MICROTUBO 1/4-7/16 600mm	MICRO-HOSE 1/4-7/16 600mm MANOMETER HOLDER
23	1	RACC/E2006009W	RACC. L MASCHIO GIREVOLE CON OR E2006009W 1/8 TUBO 8	TURNING FITTING 90° WITH OR E2006009W 1/8 TUBE 8
24	0,4	TUBRILSAN6X4/N	TUBO RILSAN NERO 6x4 PER ALTE TEMPERATURE	BLACK RILSAN HOSE 6x4 HIGHT TEMPERATURE
25	1	RACC/E2L35F08	RACC. T FEMMINA GIREVOLE E2L35F08 1/4 F TUBO 6	T FITTING 1/4 F TUBE 6

CIRCUITO DI FILTRAZIONE - FILTERING CIRCUIT

Mod: Compact Evo

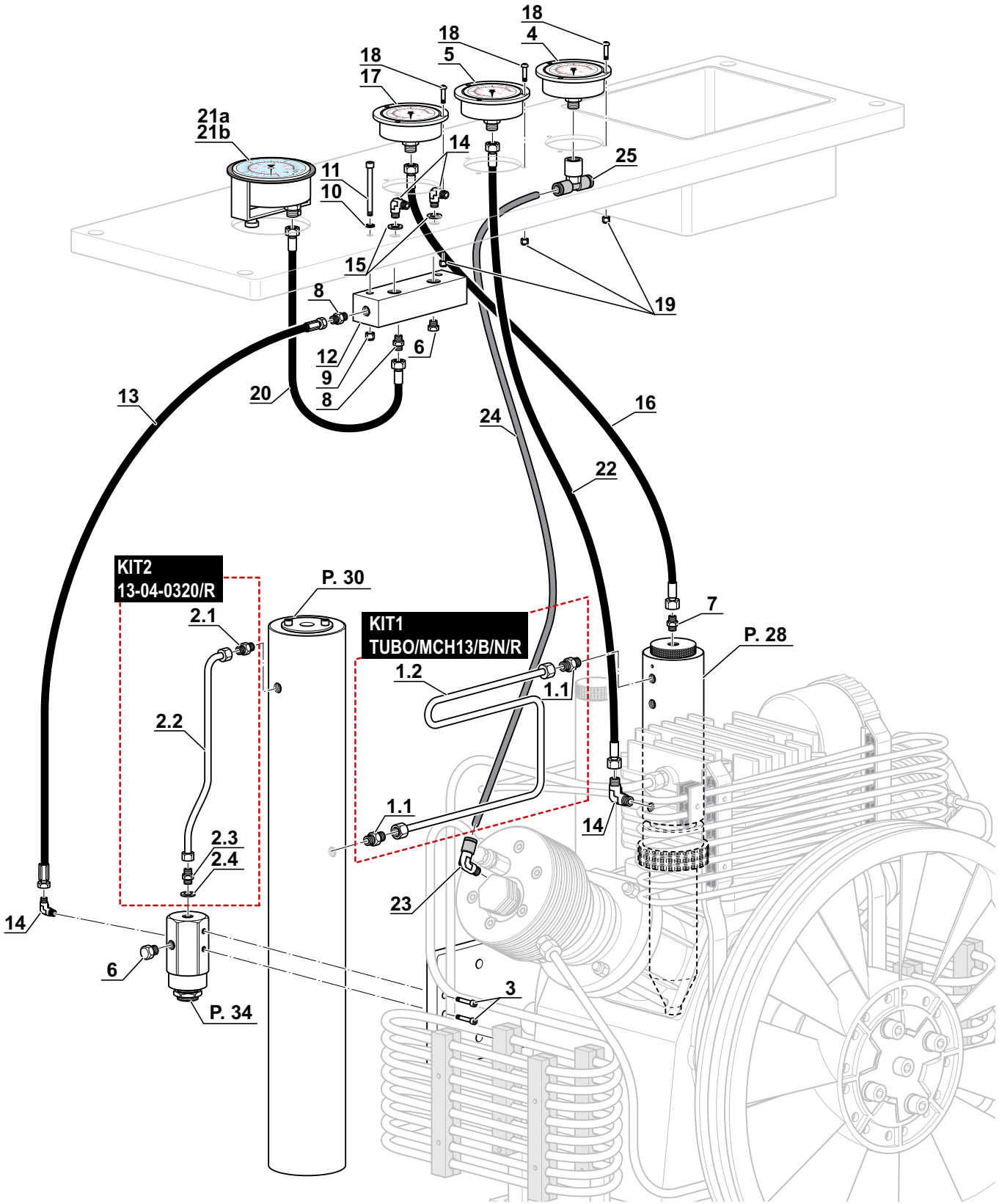

CIRCUITO DI FILTRAZIONE - FILTERING CIRCUIT

Mod: Mini Silent

Rif. Pos.	Q.tà Q.ty	Codice Code	Descrizione	Description
1	6	13-00-0174	Racc. 1/8 NPT 7/16 Tubo 6 mm	STRAIGHT 1/8 PIPE FITTING 6
2	2	36-07-008	RACCORDO 90° 1/4NPT - 7/16	FITTING 90° 1/4NPT - 7/16
3	1	13-00-0144	RACCORDO 90° 1/8 - 7/16 TUBO 6mm	FITTING 90° 1/8 - TUBO 6mm
4	2	13-04-0500	MICROTUBO 1/4-7/16 250mm	MICRO-HOSE 1/4-7/16 250mm MANOMETER-HOLDER
5	1	13-04-0284/AIR	TUBO HP 600mm AIR	HP 600mm AIR TUBE
6	1	13-04-0217	BLOCCHETTO ALLUMINIO RAMPA DI RICARICA	RECHARGE ALUMINIUM BLOCK
7	1	13-04-0211	MANOMETRO 0-400BAR CON FLANGIA	0-400BAR W/FLANGE PRESSURE GAUGE
8	3	36-07-006	VITE TCEI M3x10 INOX MCH36	SCREW TCEI M3x10 INOX MCH36
9	3	DA003I	DADO INOX AUTOBLOC. M3	SELF LOCKING NUT M3 INOX
10a	1	SC000310	PRESSOSTATO CON MICRO 280 BAR	PRESSURE SWITCH MICRO 280 BAR
10b	1	SC000315	PRESSOSTATO CON MICRO 330BAR	PRESSURE SWITCH MICRO 330BAR
11	2	13-00-0137	DADO ZINCATO AUTOBLOC. M6 ALTO	SELF LOCKING NUT M6 HIGH
12	4	RON6I	RONDELLA PIANA M6 INOX DIN125	FLAT WASHER M6 INOX DIN125
13	2	VITE0645I	VITE T.C.E. INOX 6x45	SCREW T.C.E. INOX 6x45
14	1	13-04-0327/AIR	TUBO HP 700mm AIR	HP 700mm AIR HOSE
15	2	13-00-0093	STAFFA PORTAFILTRO MCH13-16	FILTER HOLDING BRACKET MCH13/16
16	4	13-00-0101	DADO ZINCATO AUTOBLOC. M8 ALTO	8MM SELF-LOCKING NUT
17	1	13-00-0173	RACCORDO DIRITTO VALVOLA	SAFETY VALVE FITTING 1/8'' NPT
18	1	RON10I	RONDELLA PIANA M10 INOX DIN125	FLAT WASHER M10 INOX DIN125
19	1	13-00-0139	TAPPO 1/8 NPT CIECO	PLUG 1/8 NPT
20	2	00-00-0000	STAFFA FISSAGGIO MAXIFILTER	MAXIFILTER BRACKET

CIRCUITO DI FILTRAZIONE - FILTERING CIRCUIT
Mod: Mini Silent

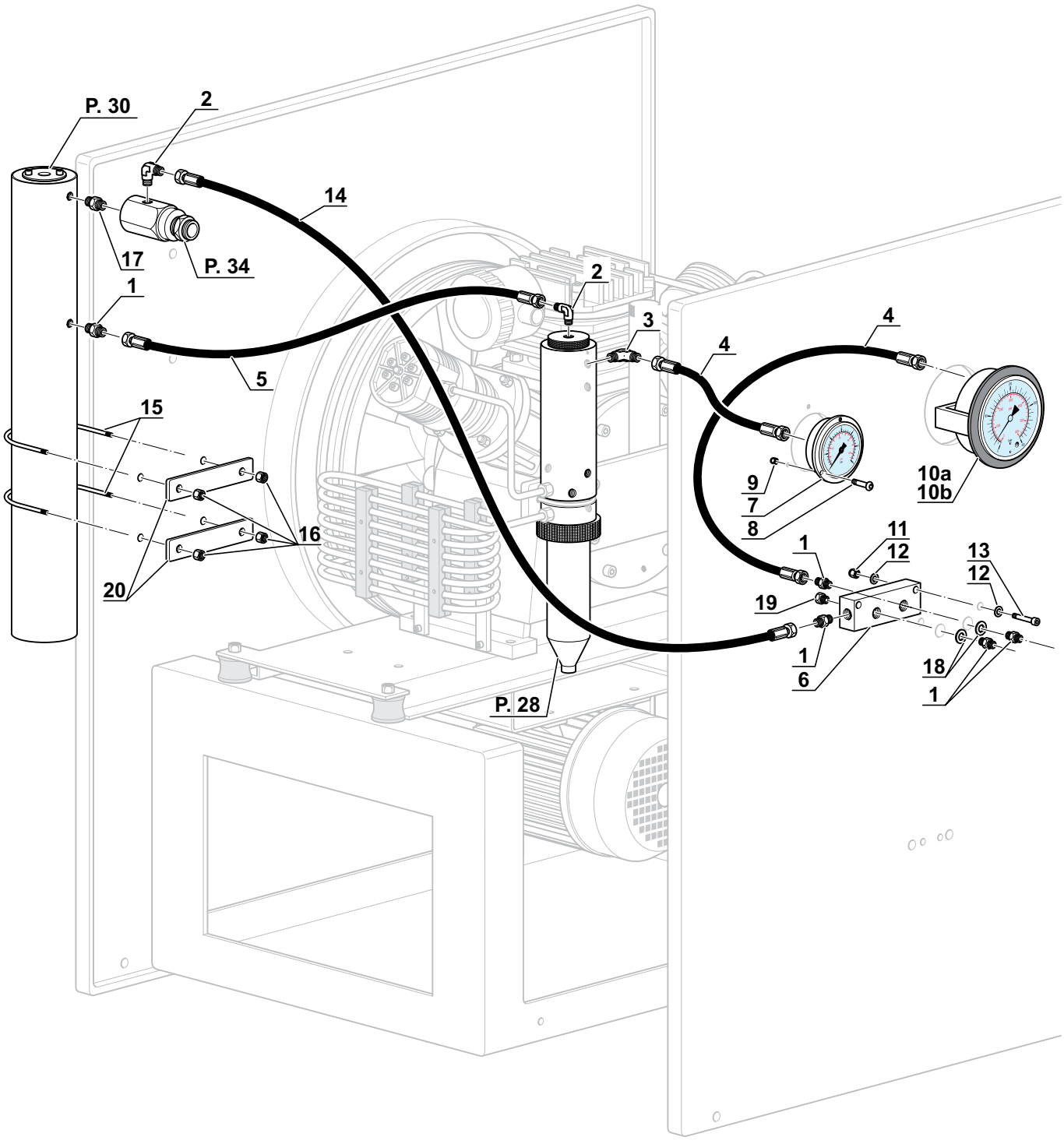

CIRCUITO DI FILTRAZIONE - FILTERING CIRCUIT

Mod: Super Silent Evo

Rif. Pos.	Q.tà Q.ty	Codice Code	Descrizione	Description
1	5	13-00-0174E	Racc. 1/8 NPT 7/16 Tubo 6 mm	STRAIGHT 1/8 PIPE FITTING 6
2	1	13-00-0144	RACCORDO 90° 1/8 - 7/16 TUBO 6mm	FITTING 90° 1/8 - TUBO 6mm
3	1	RACC/E2006009W	RACC. L MASCHIO GIREVOLE CON OR E2006009W 1/8 TUBO 8	TURNING FITTING 90° WITH OR E2006009W 1/8 TUBE 8
4	1	13-04-0213	MICROTUBO 1/4-7/16 400mm	MICRO-HOSE 1/4-7/16 400mm MANOMETER HOLDER
5	1	36-05-00200	MICROTUBO 1/4-7/16 800mm	MICRO-HOSE 1/4-7/16 800mm MANOMETER HOLDER
6	1	13-04/0288/SS	TUBO HP 500mm	HP HOSE 500MM
7	0,5	TUBRILSAN6X4/N	TUBO RILSAN NERO 6x4 PER ALTE TEMPERATURE	BLACK RILSAN HOSE 6x4 HIGHT TEMPERATURE
8	1	RACC/E2L35F08	RACC. T FEMMINA GIREVOLE E2L35F08 1/4 F TUBO 6	T FITTING 1/4 F TUBE 6
9	1	13-04-0217	BLOCCHETTO ALLUMINIO RAMPA DI RICARICA	RECHARGE ALUMINIUM BLOCK
10	1	36-05-00240	MICROTUBO 1/4-7/16 L.300 mm	MICRO-HOSE 1/4-7/16 300mm MANOMETER HOLDER
11	1	13-00-0037	TUBO INOX DIAM.6X1 TELAIO MCH13TELAIO	INOX PIPE D6X1 FRAME MCH13
12	1	13-00-0025	RACCORDO 1/4 NPT -TUBO 6mm 7/16	STRAIGHT FITTING 1/4 TUBE 6MM 7/16
13	1	13-04-0520	RACCORDO 1/4 GAS - 1/8 NPT F.	FITTING 1/4 GAS - 1/8 NPT F.
14	1	13-05-0120	MAN.0-16 BAR/PSI CON FLANGIA	FLANGED PRESSURE GAUGE 0-16 BAR/PSI
15	1	13-05-0130	MAN.0-100 BAR/PSI CON FLANGIA	FLANGED PRESSURE GAUGE 0-100 BAR/PSI
16	1	13-04-0211	MANOMETRO 0-400BAR CON FLANGIA	0-400BAR W/FLANGE PRESSURE GAUGE
17a	1	SC000310	PRESSOSTATO CON MICRO 280 BAR	PRESSURE SWITCH MICRO 280 BAR
17b	1	SC000315	PRESSOSTATO CON MICRO 330BAR	PRESSURE SWITCH MICRO 330BAR
18	4	13-00-0101	DADO ZINCATO AUTOBLOC. M8 ALTO	8MM SELF-LOCKING NUT
19	2	13-00-0093	STAFFA PORTAFILTRO MCH13-16	FILTER HOLDING BRACKET MCH13/16
20	9	36-07-006	VITE TCEI M3x10 INOX MCH36	SCREW TCEI M3x10 INOX MCH36
21	9	DA003I	DADO INOX AUTOBLOC. M3	SELF LOCKING NUT M3 INOX
22	2	13-00-0137	DADO ZINCATO AUTOBLOC. M6 ALTO	SELF LOCKING NUT M6 HIGH
23	4	RON6I	RONDELLA PIANA M6 INOX DIN125	FLAT WASHER M6 INOX DIN125
24	2	VITE0645I	VITE T.C.E. INOX 6x45	SCREW T.C.E. INOX 6x45
25	2	RON10I	RONDELLA PIANA M10 INOX DIN125	FLAT WASHER M10 INOX DIN125
26	1	13-00-0139	TAPPO 1/8 NPT CIECO	PLUG 1/8 NPT
27	2	00-00-0000	STAFFA FISSAGGIO MAXIFILTER	MAXIFILTER BRACKET
28	1	13-00-0025E	RACCORDO 1/4 G -TUBO 6mm DIRITTO ERMETO	FITTING 1/4 G -PIPE 6mm ERMETO
29	1	13-00-0174	Racc. 1/8 NPT 7/16 Tubo 6 mm	STRAIGHT 1/8 PIPE FITTING 6

CIRCUITO DI FILTRAZIONE - FILTERING CIRCUIT
Mod: Super Silent Evo

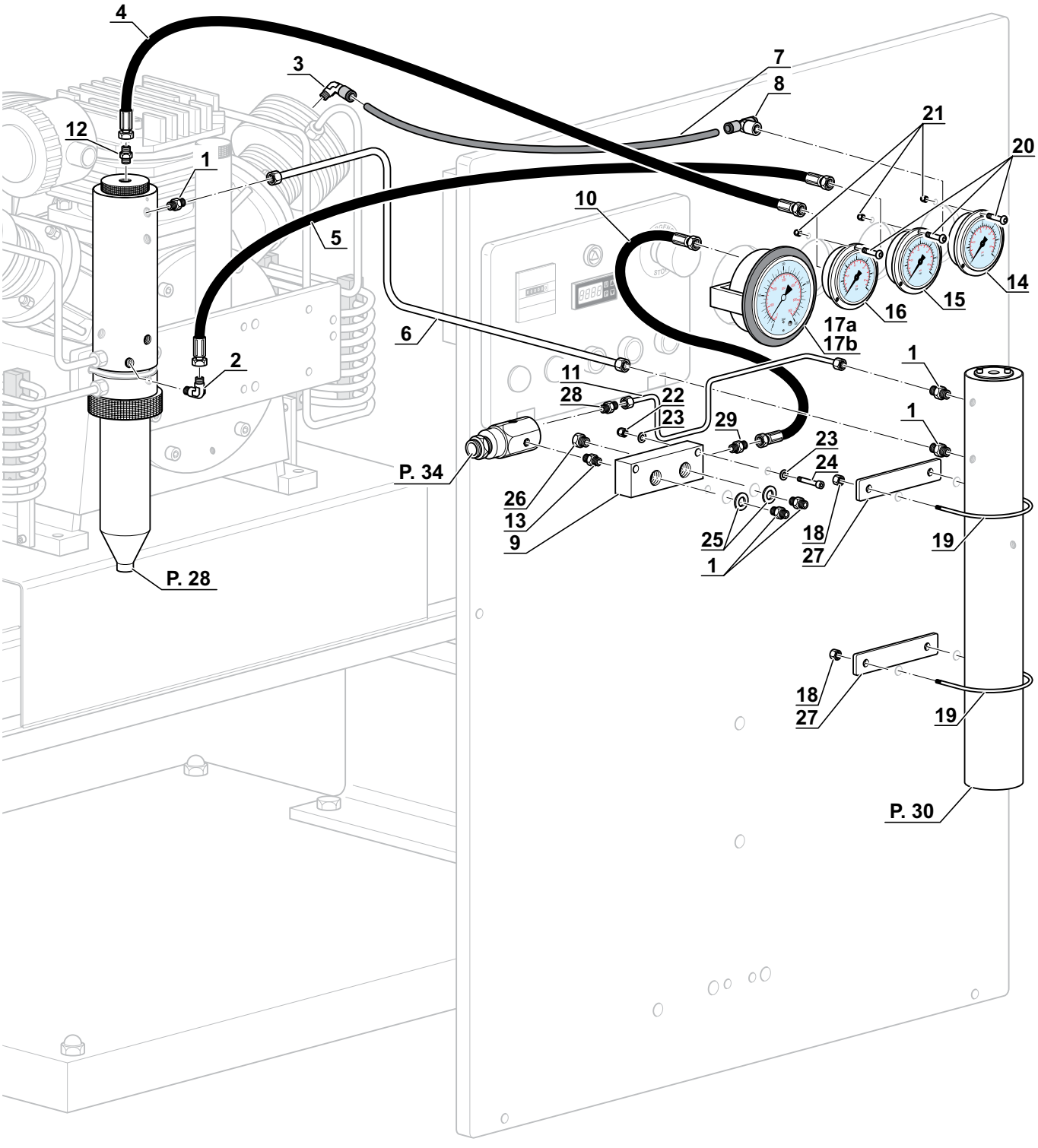

CIRCUITO DI FILTRAZIONE - FILTERING CIRCUIT

Mod: MCH-26-32/ET Compact

Rif. Pos.	Q.tà Q.ty	Codice Code	Descrizione	Description
1	12	13-00-0174	Racc. 1/8 NPT 7/16 Tubo 6 mm	STRAIGHT 1/8 PIPE FITTING 6
2	2	13-04-0217	BLOCCHETTO ALLUMINIO RAMPA DI RICARICA	RECHARGE ALUMINIUM BLOCK
3	4	13-00-0137	DADO ZINCATO AUTOBLOC. M6 ALTO	SELF LOCKING NUT M6 HIGH
4	8	RON6I	RONDELLA PIANA M6 INOX DIN125	FLAT WASHER M6 INOX DIN125
5	4	VITE0645I	VITE T.C.E. INOX 6x45	SCREW T.C.E. INOX 6x45
6	2	6-02-011	RACCORDO CILINDRO 2° STADIO	ELBOW CYLINDER 2°ND STAGE MCH6
7	2	36-07-053	RACCORDO MM 1/4 NPT - 1/4 NPT	1/4 NPT - 1/4 NPT FITTING
8	2	36-07-008	RACCORDO 90° 1/4NPT - 7/16	FITTING 90° 1/4NPT - 7/16
9	2	13-00-0144	RACCORDO 90° 1/8 - 7/16 TUBO 6mm	FITTING 90° 1/8 - TUBO 6mm
10a	1	SC000310	PRESSOSTATO CON MICRO 280 BAR	PRESSURE SWITCH MICRO 280 BAR
10b	1	SC000315	PRESSOSTATO CON MICRO 330BAR	PRESSURE SWITCH MICRO 330BAR
11	1	13-04-0211	MANOMETRO 0-400BAR CON FLANGIA	0-400BAR W/FLANGE PRESSURE GAUGE
12	3	36-07-006	VITE TCEI M3x10 INOX MCH36	SCREW TCEI M3x10 INOX MCH36
13	3	DA003I	DADO INOX AUTOBLOC. M3	SELF LOCKING NUT M3 INOX
14	8	13-00-0101	DADO ZINCATO AUTOBLOC. M8 ALTO	8MM SELF-LOCKING NUT
15	2	13-00-0093	STAFFA PORTAFILTRO MCH13-16	FILTER HOLDING BRACKET MCH13/16
16	3	13-04-0226	TUBO HP 300mm	HP 300mm HOSE
17	1	13-04-0199/AIR	TUBO HP R8 900mm AIR	HP R8 900mm AIR HOSE
18	1	13-04-0285/AIR	TUBO HP R8 800mm AIR	HP R8 800mm AIR HOSE
19	1	36-05-00240	MICROTUBO 1/4-7/16 L.300 mm	MICRO-HOSE 1/4-7/16 300mm MANOMETER HOLDER
20	1	13-04-0213	MICROTUBO 1/4-7/16 400mm	MICRO-HOSE 1/4-7/16 400mm MANOMETER HOLDER
21	4	RON10I	RONDELLA PIANA M10 INOX DIN125	FLAT WASHER M10 INOX DIN125
22	1	13-00-0139	TAPPO 1/8 NPT CIECO	PLUG 1/8 NPT
23	4	00-00-0000	STAFFA FISSAGGIO MAXIFILTER	MAXIFILTER BRACKET

CIRCUITO DI FILTRAZIONE - FILTERING CIRCUIT
Mod: MCH-26-32/ET Compact

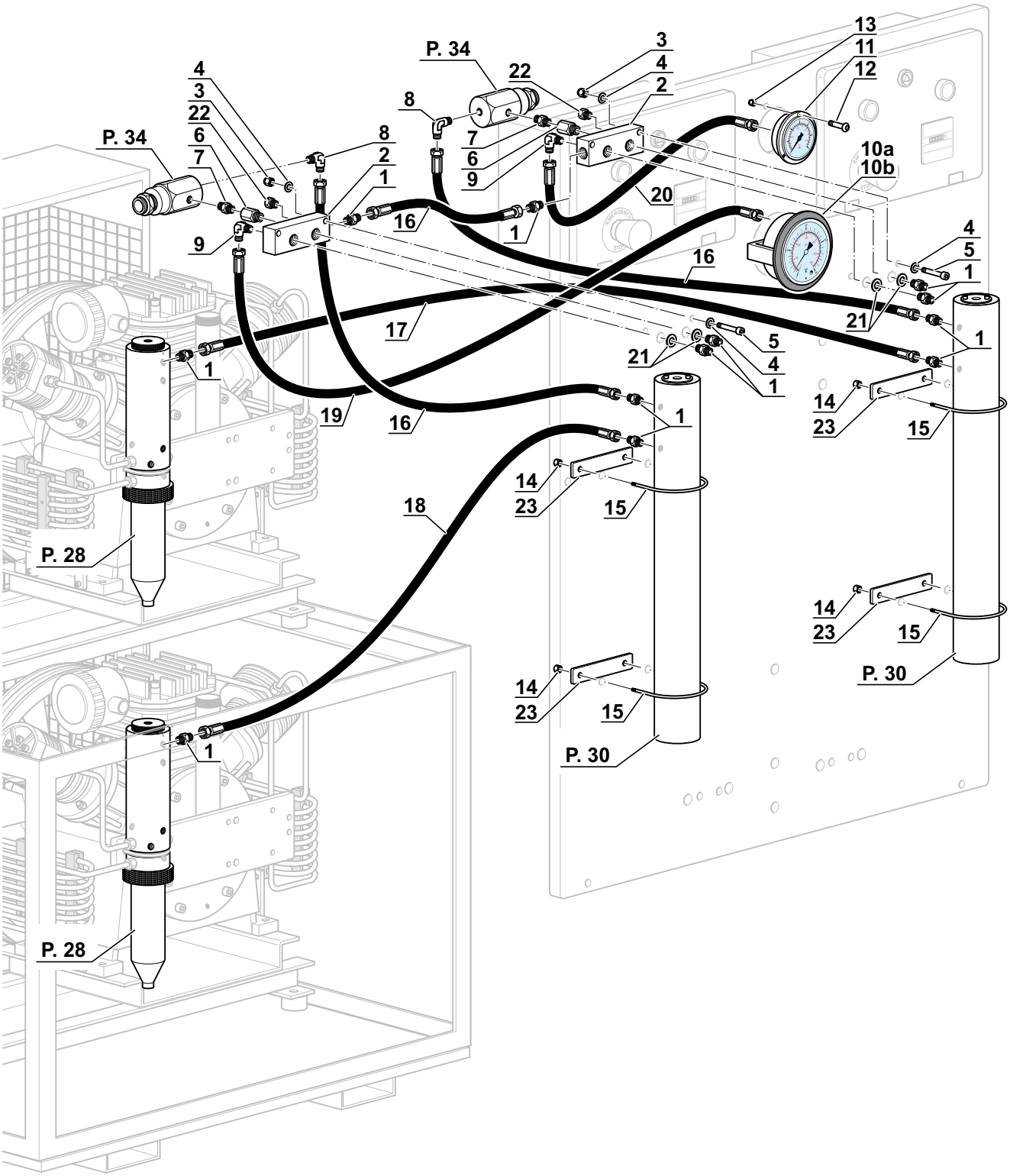

CIRCUITO DI FILTRAZIONE - FILTERING CIRCUIT

Mod: Tech Tropical - Tech Tropical Plus

Rif. Pos.	Q.tà Q.ty	Codice Code	Descrizione	Description
1	1	13-00-0162	NYLON SCARICO CONDENSA	CONDENSATE DISCHARGE NYLON
KIT2	1	13-00-0164/R	KIT VOLANTINO RUBINETTO SCARICO CONDENSA	CONDENSATE DISCHARGE WHEEL VALVE KIT
2.1	1	13-00-0164	VOLANTINO SCARICO CONDENSA	CONDENSATE DISCHARGE WHEEL
2.2	1	13-00-0163	MOLLA SCARICO CONDENSA	CONDENSATE DISCHARGE SPRING
2.3	1	13-00-0162	NYLON SCARICO CONDENSA	CONDENSATE DISCHARGE NYLON
KIT3a	1	13-00-0161-1/4G/R	KIT RUBINETTO SCARICO CONDENSA 1/4	CONDENSATE DISCHARGE BODY VALVE 1/4 KIT
3.1	1	13-00-0164	VOLANTINO SCARICO CONDENSA	CONDENSATE DISCHARGE WHEEL
3.2	1	13-00-0163	MOLLA SCARICO CONDENSA	CONDENSATE DISCHARGE SPRING
3.3	1	13-00-0162	NYLON SCARICO CONDENSA	CONDENSATE DISCHARGE NYLON
3.4a	1	13-00-0161-1/4G	CORPO RUBINETTO SCARICO CONDENSA 1/4 GAS	CONDENSATE DISCHARGE BODY VALVE 1/4
3.5	1	6-05-004F	BECCUCCIO RUBIN.SCARICO COND.	DRAIN VALVE PIN
KIT3b	1	13-00-0161/R	KIT RUBINETTO SCARICO CONDENSA 1/8 NPT	CONDENSATE DISCHARGE BODY VALVE1/8 NPT KIT
3.1	1	13-00-0164	VOLANTINO SCARICO CONDENSA	CONDENSATE DISCHARGE WHEEL
3.2	1	13-00-0163	MOLLA SCARICO CONDENSA	CONDENSATE DISCHARGE SPRING
3.3	1	13-00-0162	NYLON SCARICO CONDENSA	CONDENSATE DISCHARGE NYLON
3.4b	1	13-00-0161	CORPO RUBINETTO SCARICO CONDENSA 1/8 NPT	CONDENSATE DISCHARGE BODY VALVE1/8 NPT
3.5	1	6-05-004F	BECCUCCIO RUBIN.SCARICO COND.	DRAIN VALVE PIN
4	1	RACC/E7223/8-1/4	RACCORDO E722- 3/8" 1/4" LARGA	FITTING 3/8" - 1/4"
5	1	RAC/1/4/T	RACCORDO A "T" FFF 1/4	FITTING "T" FFF 1/4
6	1	13-04-0225	RACCORDO 1/4 GAS - 1/4 NPT	1/4 GAS-1/4 NPT PIPE FITTING
7	1	13-00-0025	RACCORDO 1/4 NPT -TUBO 6mm DIRITTO 7/16	STRAIGHT FITTING 1/4 TUBE 6MM 7/16
8	1	13-00-0174	Racc. 1/8 NPT 7/16 Tubo 6 mm	STRAIGHT 1/8 PIPE FITTING 6
9	2	13-00-0137	DADO ZINCATO AUTOBLOC. M6 ALTO	SELF LOCKING NUT M6 HIGH
10	4	RON6I	RONDELLA PIANA M6 INOX DIN125	FLAT WASHER M6 INOX DIN125
11	2	VITE0645I	VITE T.C.E. INOX 6x45	SCREW T.C.E. INOX 6x45
12	1	13-04-0217	BLOCCHETTO ALLUMINIO RAMPA DI RICARICA	RECHARGE ALUMINIUM BLOCK
13	1	13-00-0146	RACCORDO 90° 1/4 - TUBO 6mm	90° FITTING 1/4 - TUBE 6mm
14	3	13-00-0144	RACCORDO 90° 1/8 - 7/16 TUBO 6mm	FITTING 90° 1/8 - TUBO 6mm
15	2	RON10I	RONDELLA PIANA M10 INOX DIN125	FLAT WASHER M10 INOX DIN125
16	1	13-04-0213	MICROTUBO 1/4-7/16 400mm	MICRO-HOSE 1/4-7/16 400mm MANOMETER HOLDER
17	1	13-04-0211	MANOMETRO 0-400BAR CON FLANGIA	MANOMETER 0-400BAR W/FLANGE
18	3	36-07-006	VITE TCEI M3x10 INOX MCH36	SCREW TCEI M3x10 INOX MCH36
19	3	DA003I	DADO INOX AUTOBLOC. M3	SELF LOCKING NUT M3 INOX
20	2	13-00-0139	TAPPO 1/8 NPT CIECO	PLUG 1/8 NPT
21	1	13-04-0250	TUBO HP 1200mm	HP HOSE 1200mm
22	1	13-04-0327/AIR	TUBO HP 700mm AIR	HP 700mm AIR HOSE
23	1	S230-06-17G	RACCORDO DIRITTO FIL.TERM.MAS. 3/8 GAS TUBO 6 7/16	STRAIGHT FITTING 3/8 GAS TUBE 6 7/16

CIRCUITO DI FILTRAZIONE - FILTERING CIRCUIT
Mod: Tech Tropical - Tech Tropical Plus

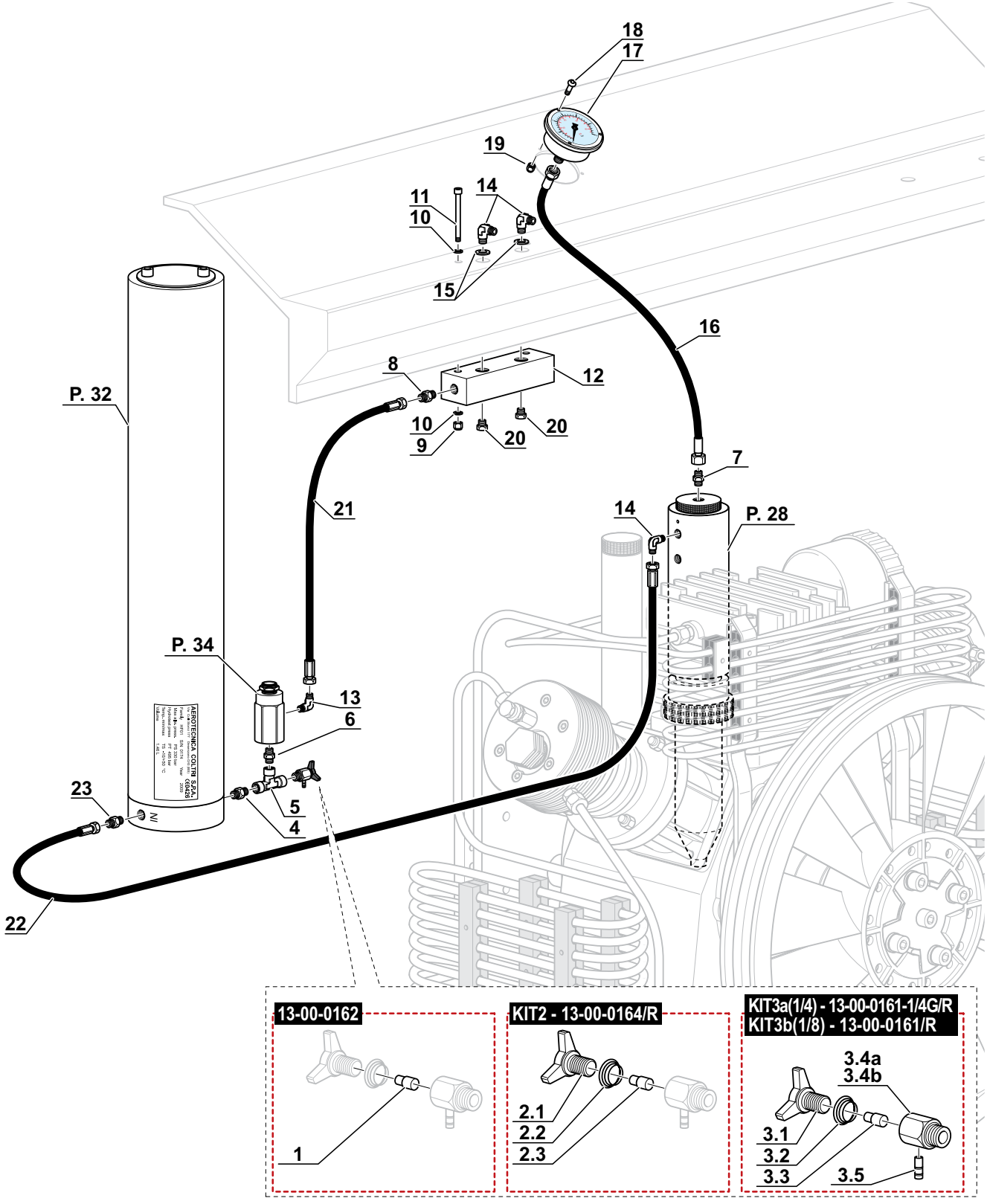

CIRCUITO DI FILTRAZIONE - FILTERING CIRCUIT

Mod: Super Silent Evo Tropical

Rif. Pos.	Q.tà Q.ty	Codice Code	Descrizione	Description
1	1	13-00-0162	NYLON SCARICO CONDENSA	CONDENSATE DISCHARGE NYLON
KIT2	1	13-00-0164/R	KIT VOLANTINO RUBINETTO SCARICO CONDENSA	CONDENSATE DISCHARGE WHEEL VALVE KIT
2.1	1	13-00-0164	VOLANTINO SCARICO CONDENSA	CONDENSATE DISCHARGE WHEEL
2.2	1	13-00-0163	MOLLA SCARICO CONDENSA	CONDENSATE DISCHARGE SPRING
2.3	1	13-00-0162	NYLON SCARICO CONDENSA	CONDENSATE DISCHARGE NYLON
KIT3a	1	13-00-0161-1/4G/R	KIT RUBINETTO SCARICO CONDENSA 1/4	CONDENSATE DISCHARGE BODY VALVE 1/4 KIT
3.1	1	13-00-0164	VOLANTINO SCARICO CONDENSA	CONDENSATE DISCHARGE WHEEL
3.2	1	13-00-0163	MOLLA SCARICO CONDENSA	CONDENSATE DISCHARGE SPRING
3.3	1	13-00-0162	NYLON SCARICO CONDENSA	CONDENSATE DISCHARGE NYLON
3.4a	1	13-00-0161-1/4G	CORPO RUBINETTO SCARICO CONDENSA 1/4 GAS	CONDENSATE DISCHARGE BODY VALVE 1/4
3.5	1	6-05-004F	BECCUCCIO RUBIN.SCARICO COND.	DRAIN VALVE PIN
KIT3b	1	13-00-0161/R	KIT RUBINETTO SCARICO CONDENSA 1/8 NPT	CONDENSATE DISCHARGE BODY VALVE1/8 NPT KIT
3.1	1	13-00-0164	VOLANTINO SCARICO CONDENSA	CONDENSATE DISCHARGE WHEEL
3.2	1	13-00-0163	MOLLA SCARICO CONDENSA	CONDENSATE DISCHARGE SPRING
3.3	1	13-00-0162	NYLON SCARICO CONDENSA	CONDENSATE DISCHARGE NYLON
3.4b	1	13-00-0161	CORPO RUBINETTO SCARICO CONDENSA 1/8 NPT	CONDENSATE DISCHARGE BODY VALVE1/8 NPT
3.5	1	6-05-004F	BECCUCCIO RUBIN.SCARICO COND.	DRAIN VALVE PIN
4	1	13-04-0213	MICROTUBO 1/4-7/16 400mm	MICRO-HOSE 1/4-7/16 400mm MANOMETER HOLDER
5	1	36-05-00200	MICROTUBO 1/4-7/16 800mm	MICRO-HOSE 1/4-7/16 800mm MANOMETER HOLDER
6	1	13-04-0327/AIR	TUBO HP 700mm AIR	HP 700mm AIR HOSE
7	0,5	TUBRILSAN6X4/N	TUBO RILSAN NERO 6x4 PER ALTE TEMPERATURE	BLACK RILSAN HOSE 6x4 HIGHT TEMPERATURE
8	1	RACC/E2L35F08	RACC. T FEMMINA GIREVOLE E2L35F08 1/4 F TUBO 6	T FITTING 1/4 F TUBE 6
9	1	13-04-0217	BLOCCHETTO ALLUMINIO RAMPA DI RICARICA	RECHARGE ALUMINIUM BLOCK
10	1	36-05-00240	MICROTUBO 1/4-7/16 L.300 mm	MICRO-HOSE 1/4-7/16 300mm MANOMETER HOLDER
11	1	13-04-0284/AIR	TUBO HP 600mm AIR	HP 600mm AIR TUBE
12	1	13-00-0025	RACCORDO 1/4 NPT -TUBO 6mm DIRITTO 7/16	STRAIGHT FITTING 1/4 TUBE 6MM 7/16
13	1	13-04-0520	RACCORDO 1/4 GAS - 1/8 NPT F.	FITTING 1/4 GAS - 1/8 NPT F.
14	1	13-05-0120	MAN.0-16 BAR/PSI CON FLANGIA	FLANGED PRESSURE GAUGE 0-16 BAR/PSI
15	1	13-05-0130	MAN.0-100 BAR/PSI CON FLANGIA	FLANGED PRESSURE GAUGE 0-100 BAR/PSI
16	1	13-04-0211	MANOMETRO 0-400BAR CON FLANGIA	0-400BAR W/FLANGE PRESSURE GAUGE
17a	1	SC000310	PRESSOSTATO CON MICRO 280 BAR	PRESSURE SWITCH MICRO 280 BAR
17b	1	SC000315	PRESSOSTATO CON MICRO 330BAR	PRESSURE SWITCH MICRO 330BAR
18	4	13-00-0101	DADO ZINCATO AUTOBLOC. M8 ALTO	8MM SELF-LOCKING NUT
19	2	SC000537	CAVALLOTTO PER PRESEC	HOLDING BRACKET PRESEC
20	9	36-07-006	VITE TCEI M3x10 INOX MCH36	SCREW TCEI M3x10 INOX MCH36
21	9	DA003I	DADO INOX AUTOBLOC. M3	SELF LOCKING NUT M3 INOX
22	2	13-00-0137	DADO ZINCATO AUTOBLOC. M6 ALTO	SELF LOCKING NUT M6 HIGH
23	4	RON6I	RONDELLA PIANA M6 INOX DIN125	FLAT WASHER M6 INOX DIN125
24	2	VITE0645I	VITE T.C.E. INOX 6x45	SCREW T.C.E. INOX 6x45
25	2	RAC4-6F40MXS	RACCORDO M-M 7/16-3/8"G CON OR	FITTING M-M 7/16-3/8"G WITH OR
26	2	RACC4EMTXS	RACCORDO M-F 7/16-7/16 GIREVOLE	FITTING M-F 7/16-7/16 REVOLVING
27	1	RON10I	RONDELLA PIANA M10 INOX DIN125	FLAT WASHER M10 INOX DIN125
28	1	13-00-0139	TAPPO 1/8 NPT CIECO	PLUG 1/8 NPT
29	2	13-05-0610	STAFFA SUPPORTO HYPERFILTER MARK1	HYPERFILTER BRACKET MARK1
30	4	13-00-0174	Racc. 1/8 NPT 7/16 Tubo 6 mm	STRAIGHT 1/8 PIPE FITTING 6
31	1	13-00-0144	RACCORDO 90° 1/8 - 7/16 TUBO 6mm	FITTING 90° 1/8 - TUBO 6mm
32	1	RACC/E2L31C08	RACC. L MASCHIO GIREVOLE CONICO E2L31C08 1/8 M TUBO 6	TURNING FITTING 1/8M TUBE6
33	1	RAC/1/4G-1/4G	RACC. DIRITTO M-M1/4G	STRAIGHT M-M1/4G
34	1	SC000492	VALVOLA DI NON RITORNO	CHECK VALVE
35	1	13-00-0027	RACCORDO M-M 1/4NPT-TUBO6 CON FORO 1/8"	FITTING M-M 1/4NPT-TUBE6 WITH HOLE 1/8"

CIRCUITO DI FILTRAZIONE - FILTERING CIRCUIT

Mod: Super Silent Evo Tropical

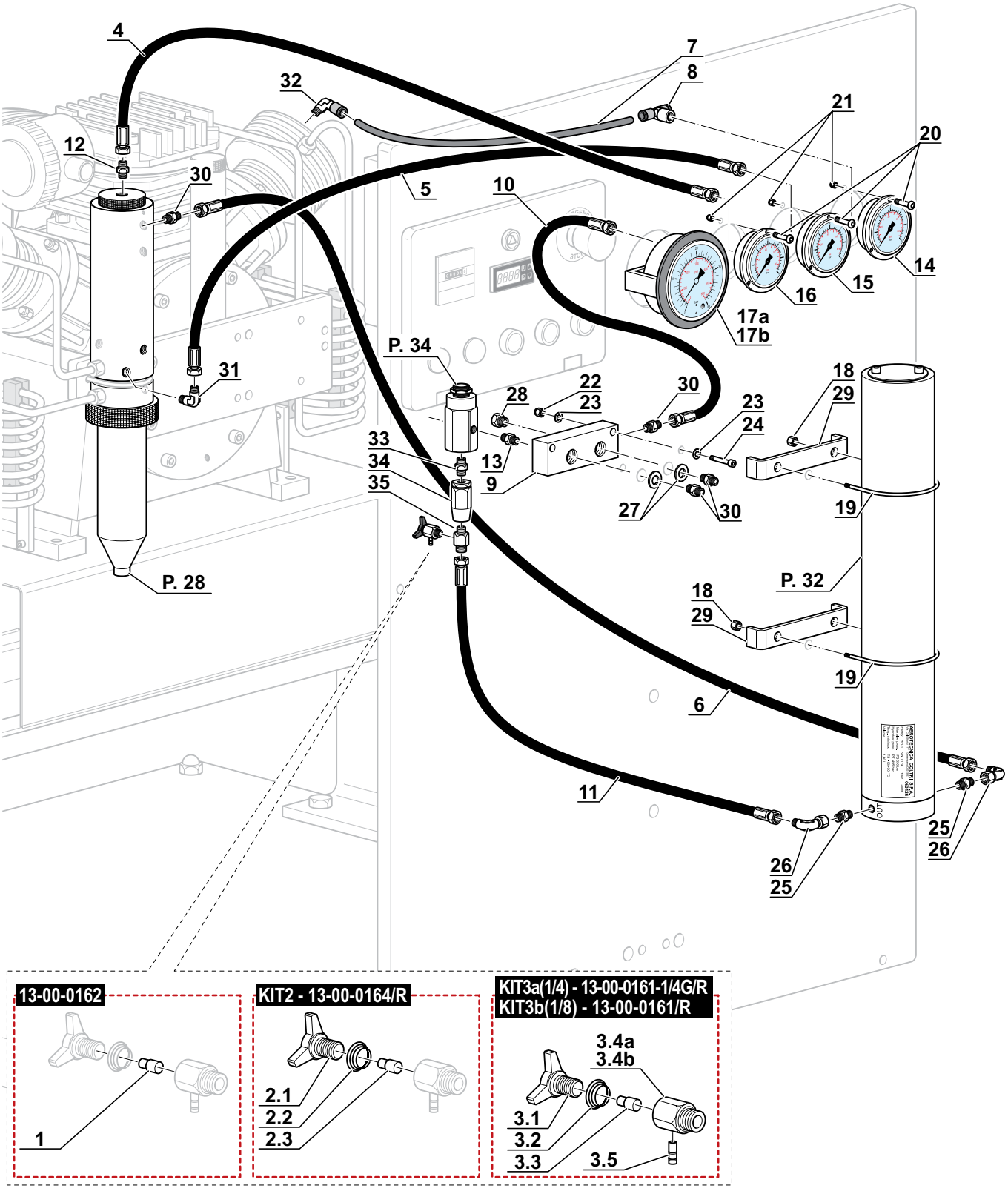

CIRCUITO DI FILTRAZIONE - FILTERING CIRCUIT

Mod: Super Silent Evo Tropical Plus

Rif. Pos.	Q.tà Q.ty	Codice Code	Descrizione	Description
1	1	13-00-0162	NYLON SCARICO CONDENSA	CONDENSATE DISCHARGE NYLON
KIT2	1	13-00-0164/R	KIT VOLANTINO RUBINETTO SCARICO CONDENSA	CONDENSATE DISCHARGE WHEEL VALVE KIT
2.1	1	13-00-0164	VOLANTINO SCARICO CONDENSA	CONDENSATE DISCHARGE WHEEL
2.2	1	13-00-0163	MOLLA SCARICO CONDENSA	CONDENSATE DISCHARGE SPRING
2.3	1	13-00-0162	NYLON SCARICO CONDENSA	CONDENSATE DISCHARGE NYLON
KIT3a	1	13-00-0161-1/4G/R	KIT RUBINETTO SCARICO CONDENSA 1/4	CONDENSATE DISCHARGE BODY VALVE 1/4 KIT
3.1	1	13-00-0164	VOLANTINO SCARICO CONDENSA	CONDENSATE DISCHARGE WHEEL
3.2	1	13-00-0163	MOLLA SCARICO CONDENSA	CONDENSATE DISCHARGE SPRING
3.3	1	13-00-0162	NYLON SCARICO CONDENSA	CONDENSATE DISCHARGE NYLON
3.4a	1	13-00-0161-1/4G	CORPO RUBINETTO SCARICO CONDENSA 1/4 GAS	CONDENSATE DISCHARGE BODY VALVE 1/4
3.5	1	6-05-004F	BECCUCCIO RUBIN.SCARICO COND.	DRAIN VALVE PIN
KIT3b	1	13-00-0161/R	KIT RUBINETTO SCARICO CONDENSA 1/8 NPT	CONDENSATE DISCHARGE BODY VALVE1/8 NPT KIT
3.1	1	13-00-0164	VOLANTINO SCARICO CONDENSA	CONDENSATE DISCHARGE WHEEL
3.2	1	13-00-0163	MOLLA SCARICO CONDENSA	CONDENSATE DISCHARGE SPRING
3.3	1	13-00-0162	NYLON SCARICO CONDENSA	CONDENSATE DISCHARGE NYLON
3.4b	1	13-00-0161	CORPO RUBINETTO SCARICO CONDENSA 1/8 NPT	CONDENSATE DISCHARGE BODY VALVE1/8 NPT
3.5	1	6-05-004F	BECCUCCIO RUBIN.SCARICO COND.	DRAIN VALVE PIN
4	1	13-04-0213	MICROTUBO 1/4-7/16 400mm	MICRO-HOSE 1/4-7/16 400mm MANOMETER HOLDER
5	1	36-05-00200	MICROTUBO 1/4-7/16 800mm	MICRO-HOSE 1/4-7/16 800mm MANOMETER HOLDER
6	1	13-04-0327/AIR	TUBO HP 700mm AIR	HP 700mm AIR HOSE
7	0,5	TUBRILSAN6X4/N	TUBO RILSAN NERO 6x4 PER ALTE TEMPERATURE	BLACK RILSAN HOSE 6x4 HIGHT TEMPERATURE
8	1	RACC/E2L35F08	RACC. T FEMMINA GIREVOLE E2L35F08 1/4 F TUBO 6	T FITTING 1/4 F TUBE 6
9	1	13-04-0217	BLOCCHETTO ALLUMINIO RAMPA DI RICARICA	RECHARGE ALUMINIUM BLOCK
10	1	36-05-00240	MICROTUBO 1/4-7/16 L.300 mm	MICRO-HOSE 1/4-7/16 300mm MANOMETER HOLDER
11	1	13-04-0284/AIR	TUBO HP 600mm AIR	HP 600mm AIR TUBE
12	1	13-00-0025	RACCORDO 1/4 NPT -TUBO 6mm DIRITTO 7/16	STRAIGHT FITTING 1/4 TUBE 6MM 7/16
13	1	13-04-0520	RACCORDO 1/4 GAS - 1/8 NPT F.	FITTING 1/4 GAS - 1/8 NPT F.
14	1	13-05-0120	MAN.0-16 BAR/PSI CON FLANGIA	FLANGED PRESSURE GAUGE 0-16 BAR/PSI
15	1	13-05-0130	MAN.0-100 BAR/PSI CON FLANGIA	FLANGED PRESSURE GAUGE 0-100 BAR/PSI
16	1	13-04-0211	MANOMETRO 0-400BAR CON FLANGIA	0-400BAR W/FLANGE PRESSURE GAUGE
17a	1	SC000310	PRESSOSTATO CON MICRO 280 BAR	PRESSURE SWITCH MICRO 280 BAR
17b	1	SC000315	PRESSOSTATO CON MICRO 330BAR	PRESSURE SWITCH MICRO 330BAR
18	8	13-00-0101	DADO ZINCATO AUTOBLOC. M8 ALTO	8MM SELF-LOCKING NUT
19	4	SC000537	CAVALLOTTO PER PRESEC	HOLDING BRACKET PRESEC
20	9	36-07-006	VITE TCEI M3x10 INOX MCH36	SCREW TCEI M3x10 INOX MCH36
21	9	DA003I	DADO INOX AUTOBLOC. M3	SELF LOCKING NUT M3 INOX
22	2	13-00-0137	DADO ZINCATO AUTOBLOC. M6 ALTO	SELF LOCKING NUT M6 HIGH
23	4	RON6I	RONDELLA PIANA M6 INOX DIN125	FLAT WASHER M6 INOX DIN125
24	2	VITE0645I	VITE T.C.E. INOX 6x45	SCREW T.C.E. INOX 6x45
25	2	RAC4-6F40MXS	RACCORDO M-M 7/16-3/8"G CON OR	FITTING M-M 7/16-3/8"G WITH OR
26	2	RACC4EMTXS	RACCORDO M-F 7/16-7/16 GIREVOLE	FITTING M-F 7/16-7/16 REVOLVING
27	1	RON10I	RONDELLA PIANA M10 INOX DIN125	FLAT WASHER M10 INOX DIN125
28	1	13-00-0139	TAPPO 1/8 NPT CIECO	PLUG 1/8 NPT
29	2	13-05-0611	STAFFA SUPPORTO HYPERFILTER MARK2	HYPERFILTER BRACKET MARK2
30	4	13-00-0174	Racc. 1/8 NPT 7/16 Tubo 6 mm	STRAIGHT 1/8 PIPE FITTING 6
31	1	13-00-0144	RACCORDO 90° 1/8 - 7/16 TUBO 6mm	FITTING 90° 1/8 - TUBO 6mm
32	1	RACC/E2L31C08	RACC. L MASCHIO GIREVOLE CONICO E2L31C08 1/8 M TUBO 6	TURNING FITTING 1/8M TUBE6
33	1	RAC/1/4G-1/4G	RACC. DIRITTO M-M1/4G	STRAIGHT M-M1/4G
34	1	SC000492	VALVOLA DI NON RITORNO	CHECK VALVE
35	1	13-00-0027	RACCORDO M-M 1/4NPT-TUBO6 CON FORO 1/8"	FITTING M-M 1/4NPT-TUBE6 WITH HOLE 1/8"
36	1	RACC-8F640	RACC. 8F640MXS 12/JD 094	FITTING 8F640MXS 12/JD 094
37	1	RACC-8F640	RACC. 8F640MXS 12/JD 094	FITTING 8F640MXS 12/JD 094

CIRCUITO DI FILTRAZIONE - FILTERING CIRCUIT

Mod: Super Silent Evo Tropical Plus

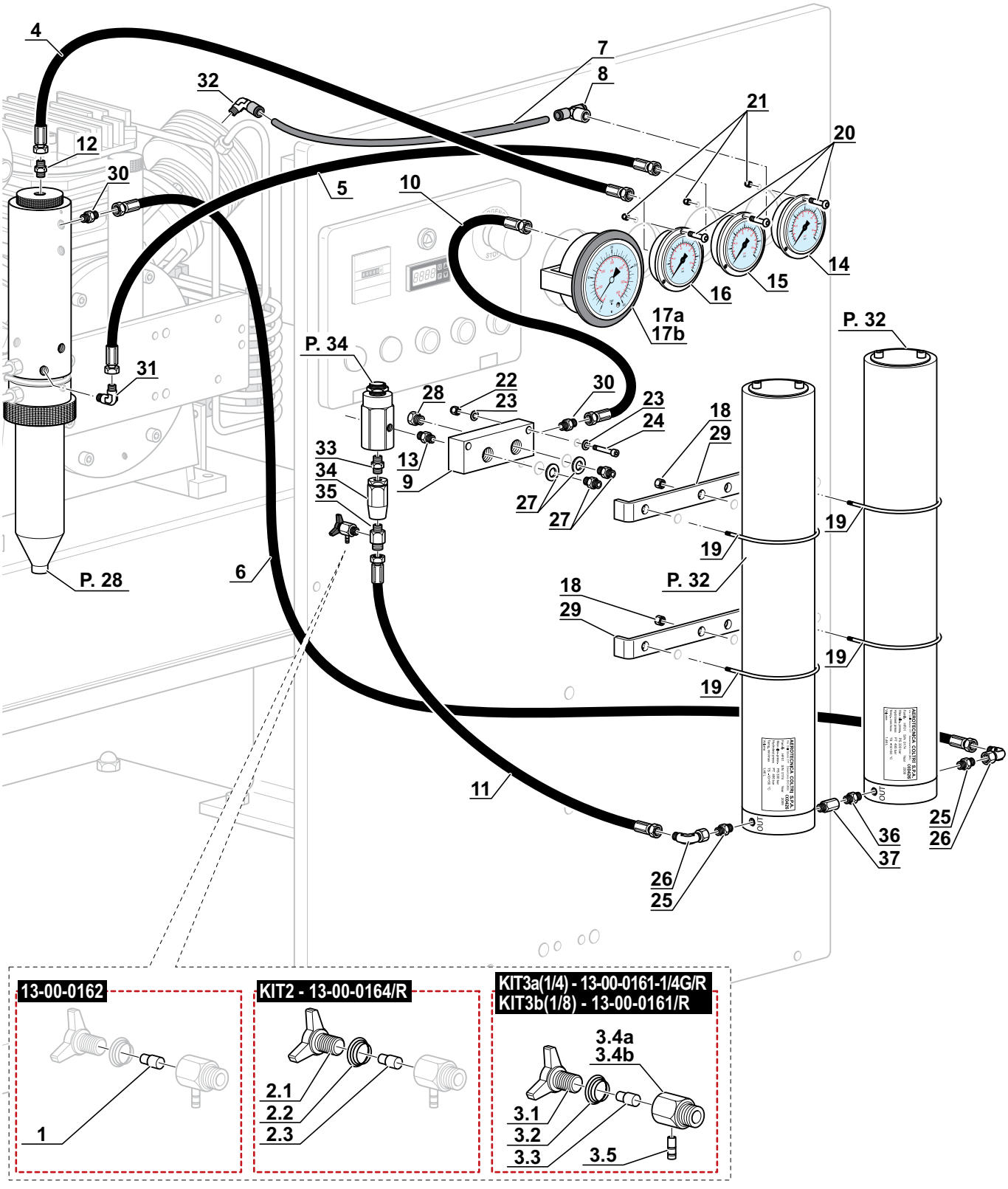

CIRCUITO DI FILTRAZIONE - FILTERING CIRCUIT

Mod: Mark1

Rif. Pos.	Q.tà Q.ty	Codice Code	Descrizione	Description
1	1	13-00-0162	NYLON SCARICO CONDENSA	CONDENSATE DISCHARGE NYLON
KIT2	1	13-00-0164/R	KIT VOLANTINO RUBINETTO SCARICO CONDENSA	CONDENSATE DISCHARGE WHEEL VALVE KIT
2.1	1	13-00-0164	VOLANTINO SCARICO CONDENSA	CONDENSATE DISCHARGE WHEEL
2.2	1	13-00-0163	MOLLA SCARICO CONDENSA	CONDENSATE DISCHARGE SPRING
2.3	1	13-00-0162	NYLON SCARICO CONDENSA	CONDENSATE DISCHARGE NYLON
KIT3a	1	13-00-0161-1/4G/R	KIT RUBINETTO SCARICO CONDENSA 1/4	CONDENSATE DISCHARGE BODY VALVE 1/4 KIT
3.1	1	13-00-0164	VOLANTINO SCARICO CONDENSA	CONDENSATE DISCHARGE WHEEL
3.2	1	13-00-0163	MOLLA SCARICO CONDENSA	CONDENSATE DISCHARGE SPRING
3.3	1	13-00-0162	NYLON SCARICO CONDENSA	CONDENSATE DISCHARGE NYLON
3.4a	1	13-00-0161-1/4G	CORPO RUBINETTO SCARICO CONDENSA 1/4 GAS	CONDENSATE DISCHARGE BODY VALVE 1/4
3.5	1	6-05-004F	BECCUCCIO RUBIN.SCARICO COND.	DRAIN VALVE PIN
KIT3b	1	13-00-0161/R	KIT RUBINETTO SCARICO CONDENSA 1/8 NPT	CONDENSATE DISCHARGE BODY VALVE1/8 NPT KIT
3.1	1	13-00-0164	VOLANTINO SCARICO CONDENSA	CONDENSATE DISCHARGE WHEEL
3.2	1	13-00-0163	MOLLA SCARICO CONDENSA	CONDENSATE DISCHARGE SPRING
3.3	1	13-00-0162	NYLON SCARICO CONDENSA	CONDENSATE DISCHARGE NYLON
3.4b	1	13-00-0161	CORPO RUBINETTO SCARICO CONDENSA 1/8 NPT	CONDENSATE DISCHARGE BODY VALVE1/8 NPT
3.5	1	6-05-004F	BECCUCCIO RUBIN.SCARICO COND.	DRAIN VALVE PIN
4	9	36-07-006	VITE TCEI M3x10 INOX MCH36	SCREW TCEI M3x10 INOX MCH36
5	9	DA003I	DADO INOX AUTOBLOC. M3	SELF LOCKING NUT M3 INOX
6	1	13-04-0211	MANOMETRO 0-400BAR CON FLANGIA	MANOMETER 0-400BAR W/FLANGE
7	1	13-05-0130	MAN.0-100 BAR/PSI CON FLANGIA	FLANGED PRESSURE GAUGE 0-100 BAR/PSI
8	1	13-05-0120	MAN.0-16 BAR/PSI CON FLANGIA	FLANGED PRESSURE GAUGE 0-16 BAR/PSI
9a	1	SC000310	PRESSOSTATO CON MICRO 280 BAR	PRESSURE SWITCH MICRO 280 BAR
9b	1	SC000315	PRESSOSTATO CON MICRO 330BAR	PRESSURE SWITCH MICRO 330BAR
10	2	VITE0645I	VITE T.C.E. INOX 6x45	SCREW T.C.E. INOX 6x45
11	2	RON6I	RONDELLA PIANA M6 INOX DIN125	FLAT WASHER M6 INOX DIN125
12	2	13-00-0137	DADO ZINCATO AUTOBLOC. M6 ALTO	SELF LOCKING NUT M6 HIGH
13	2	13-00-0144	RACCORDO 90° 1/8 - 7/16 TUBO 6mm	FITTING 90° 1/8 - TUBO 6mm
14	2	RON10I	RONDELLA PIANA M10 INOX DIN125	FLAT WASHER M10 INOX DIN125
15	1	13-04-0217	BLOCCHETTO ALLUMINIO RAMPA DI RICARICA	RECHARGE ALUMINIUM BLOCK
16	1	13-04-0225	RACCORDO M-M 1/4G-1/4NPT	FITTING M-M 1/4G-1/4NPT
17	1	RACC/E2L35F08	RACC. T FEMMINA GIREVOLE E2L35F08 1/4 F TUBO 6	T FITTING 1/4 F TUBE 6
18	1	13-00-0174	Racc. 1/8 NPT 7/16 Tubo 6 mm	STRAIGHT 1/8 PIPE FITTING 6
19	1	36-05-00240	MICROTUBO 1/4-7/16 L.300 mm	MICRO-HOSE 1/4-7/16 300mm MANOMETER HOLDER
20	1	13-00-0027	RACCORDO M-M 1/4NPT-TUBO6 CON FORO 1/8"	FITTING M-M 1/4NPT-TUBE6 WITH HOLE 1/8"
21	1	13-04-0213	MICROTUBO 1/4-7/16 400mm	MICRO-HOSE 1/4-7/16 400mm MANOMETER HOLDER
22	1	13-04-0214	MICROTUBO 1/4-7/16 600mm	MICRO-HOSE 1/4-7/16 600mm MANOMETER HOLDER
23	1	13-00-0125	RACCORDO M-M 1/4GAS -TUBO6 7/16	FITTING 1/4GAS-TUBE6 7/16
24	1	16-02-0025	RACCORDO M-M 1/4NPT-TUBO 6 ERMETO	FITTING M-M 1/4NPT-TUBE6 ERMETO
25	1	TUBRILSAN6X4/N	TUBO RILSAN NERO 6x4 PER ALTE TEMPERATURE	BLACK RILSAN HOSE 6x4 HIGHT TEMPERATURE
26	1	13-00-0144	RACCORDO 90° 1/8 - 7/16 TUBO 6mm	FITTING 90° 1/8 - TUBO 6mm
27	1	RACC/E2L31009	RACC. L MASCHIO GIREVOLE CONICO 1/4 M TUBO 6	TURNING FITTING 1/4M TUBE6
28	1	13-04-0200/SS	TUBO FE Ø6 VMP-HYPERFILTER MARK1-2	PIPE FE Ø6 VMP-HYPERFILTER MARK1-2
29	1	13-04-0199/SS	TUBO HP R8 900mm AIR	HP R8 900mm AIR HOSE
30	4	13-00-0101	DADO ZINCATO AUTOBLOC. M8 ALTO	8MM SELF-LOCKING NUT
31	2	13-05-0610	STAFFA INOX	INOX BRACKET
32	2	SC000537	CAVALLOTTO PER PRESEC	HOLDING BRACKET PRESEC
33	2	RACC4EMTXS	RACCORDO M-F 7/16-7/16 GIREVOLE	FITTING M-F 7/16-7/16 REVOLVING
34	2	RAC4-6F40MXS	RACCORDO M-M 7/16-3/8"G CON OR	FITTING M-M 7/16-3/8"G WITH OR
35	1	SC000492	VALVOLA DI NON RITORNO	CHECK VALVE
36	1	RAC/1/4G-1/4G	RACC. DIRITTO M-M1/4G	STRAIGHT M-M1/4G

CIRCUITO DI FILTRAZIONE - FILTERING CIRCUIT

Mod: Mark1

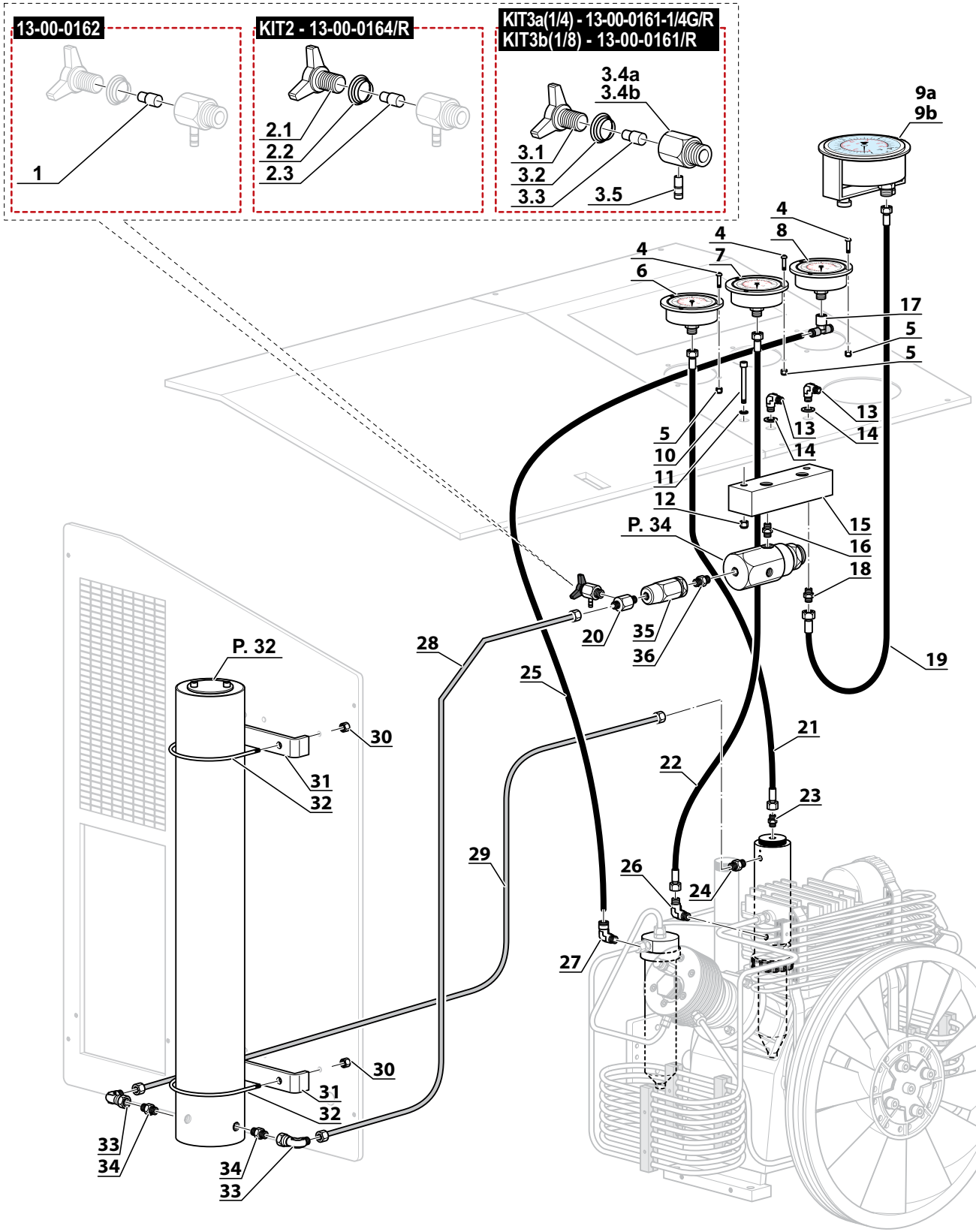

CIRCUITO DI FILTRAZIONE - FILTERING CIRCUIT

Mod: Mark2

Rif. Pos.	Q.tà Q.ty	Codice Code	Descrizione	Description
1	1	13-00-0162	NYLON SCARICO CONDENSA	CONDENSATE DISCHARGE NYLON
KIT2	1	13-00-0164/R	KIT VOLANTINO RUBINETTO SCARICO CONDENSA	CONDENSATE DISCHARGE WHEEL VALVE KIT
2.1	1	13-00-0164	VOLANTINO SCARICO CONDENSA	CONDENSATE DISCHARGE WHEEL
2.2	1	13-00-0163	MOLLA SCARICO CONDENSA	CONDENSATE DISCHARGE SPRING
2.3	1	13-00-0162	NYLON SCARICO CONDENSA	CONDENSATE DISCHARGE NYLON
KIT3a	1	13-00-0161-1/4G/R	KIT RUBINETTO SCARICO CONDENSA 1/4	CONDENSATE DISCHARGE BODY VALVE 1/4 KIT
3.1	1	13-00-0164	VOLANTINO SCARICO CONDENSA	CONDENSATE DISCHARGE WHEEL
3.2	1	13-00-0163	MOLLA SCARICO CONDENSA	CONDENSATE DISCHARGE SPRING
3.3	1	13-00-0162	NYLON SCARICO CONDENSA	CONDENSATE DISCHARGE NYLON
3.4a	1	13-00-0161-1/4G	CORPO RUBINETTO SCARICO CONDENSA 1/4 GAS	CONDENSATE DISCHARGE BODY VALVE 1/4
3.5	1	6-05-004F	BECCUCCIO RUBIN.SCARICO COND.	DRAIN VALVE PIN
KIT3b	1	13-00-0161/R	KIT RUBINETTO SCARICO CONDENSA 1/8 NPT	CONDENSATE DISCHARGE BODY VALVE1/8 NPT KIT
3.1	1	13-00-0164	VOLANTINO SCARICO CONDENSA	CONDENSATE DISCHARGE WHEEL
3.2	1	13-00-0163	MOLLA SCARICO CONDENSA	CONDENSATE DISCHARGE SPRING
3.3	1	13-00-0162	NYLON SCARICO CONDENSA	CONDENSATE DISCHARGE NYLON
3.4b	1	13-00-0161	CORPO RUBINETTO SCARICO CONDENSA 1/8 NPT	CONDENSATE DISCHARGE BODY VALVE1/8 NPT
3.5	1	6-05-004F	BECCUCCIO RUBIN.SCARICO COND.	DRAIN VALVE PIN
4	9	36-07-006	VITE TCEI M3x10 INOX MCH36	SCREW TCEI M3x10 INOX MCH36
5	9	DA003I	DADO INOX AUTOBLOC. M3	SELF LOCKING NUT M3 INOX
6	1	13-04-0211	MANOMETRO 0-400BAR CON FLANGIA	MANOMETER 0-400BAR W/FLANGE
7	1	13-05-0130	MAN.0-100 BAR/PSI CON FLANGIA	FLANGED PRESSURE GAUGE 0-100 BAR/PSI
8	1	13-05-0120	MAN.0-16 BAR/PSI CON FLANGIA	FLANGED PRESSURE GAUGE 0-16 BAR/PSI
9a	1	SC000310	PRESSOSTATO CON MICRO 280 BAR	PRESSURE SWITCH MICRO 280 BAR
9b	1	SC000315	PRESSOSTATO CON MICRO 330BAR	PRESSURE SWITCH MICRO 330BAR
10	2	VITE0645I	VITE T.C.E. INOX 6x45	SCREW T.C.E. INOX 6x45
11	2	RON6I	RONDELLA PIANA M6 INOX DIN125	FLAT WASHER M6 INOX DIN125
12	2	13-00-0137	DADO ZINCATO AUTOBLOC. M6 ALTO	SELF LOCKING NUT M6 HIGH
13	2	13-00-0144	RACCORDO 90° 1/8 - 7/16 TUBO 6mm	FITTING 90° 1/8 - TUBO 6mm
14	2	RON10I	RONDELLA PIANA M10 INOX DIN125	FLAT WASHER M10 INOX DIN125
15	1	13-04-0217	BLOCCHETTO ALLUMINIO RAMPA DI RICARICA	RECHARGE ALUMINIUM BLOCK
16	1	13-04-0225	RACCORDO M-M 1/4G-1/4NPT	FITTING M-M 1/4G-1/4NPT
17	1	RACC/E2L35F08	RACC. T FEMMINA GIREVOLE E2L35F08 1/4 F TUBO 6	T FITTING 1/4 F TUBE 6
18	1	13-00-0174	Racc. 1/8 NPT 7/16 Tubo 6 mm	STRAIGHT 1/8 PIPE FITTING 6
19	1	36-05-00240	MICROTUBO 1/4-7/16 L.300 mm	MICRO-HOSE 1/4-7/16 300mm MANOMETER HOLDER
20	1	13-00-0027	RACCORDO M-M 1/4NPT-TUBO6 CON FORO 1/8"	FITTING M-M 1/4NPT-TUBE6 WITH HOLE 1/8"
21	1	13-04-0213	MICROTUBO 1/4-7/16 400mm	MICRO-HOSE 1/4-7/16 400mm MANOMETER HOLDER
22	1	13-04-0214	MICROTUBO 1/4-7/16 600mm	MICRO-HOSE 1/4-7/16 600mm MANOMETER HOLDER
23	1	13-00-0125	RACCORDO M-M 1/4GAS -TUBO6 7/16	FITTING 1/4GAS-TUBE6 7/16
24	1	16-02-0025	RACCORDO M-M 1/4NPT-TUBO 6 ERMETO	FITTING M-M 1/4NPT-TUBE6 ERMETO
25	1,0	TUBRILSAN6X4/N	TUBO RILSAN NERO 6x4 PER ALTE TEMPERATURE	BLACK RILSAN HOSE 6x4 HIGHT TEMPERATURE
26	1	13-00-0144	RACCORDO 90° 1/8 - 7/16 TUBO 6mm	FITTING 90° 1/8 - TUBO 6mm
27	1	RACC/E2L31009	RACC. L MASCHIO GIREVOLE CONICO 1/4 M TUBO 6	TURNING FITTING 1/4M TUBE6
28	1	13-04-0200/SS	TUBO FE Ø6 VMP-HYPERFILTER MARK1-2	PIPE FE Ø6 VMP-HYPERFILTER MARK1-2
29	1	13-04-0199/SS	TUBO HP R8 900mm AIR	HP R8 900mm AIR HOSE
30	8	13-00-0101	DADO ZINCATO AUTOBLOC. M8 ALTO	8MM SELF-LOCKING NUT
31	2	13-05-0611	STAFFA INOX	INOX BRACKET
32	4	SC000537	CAVALLOTTO PER PRESEC	HOLDING BRACKET PRESEC
33	2	RACC4EMTXS	RACCORDO M-F 7/16-7/16 GIREVOLE	FITTING M-F 7/16-7/16 REVOLVING
34	2	RAC4-6F40MXS	RACCORDO M-M 7/16-3/8"G CON OR	FITTING M-M 7/16-3/8"G WITH OR
35	1	RACC-8F640	RACC. 8F640MXS 12/JD 094	FITTING 8F640MXS 12/JD 094
36	1	RACC-8F40MXS	RACC. 8F40MXS 04/JE 095	FITTING 8F40MXS 04/JE 095
37	1	SC000492	VALVOLA DI NON RITORNO	CHECK VALVE

CIRCUITO DI FILTRAZIONE - FILTERING CIRCUIT

Mod: Mark2

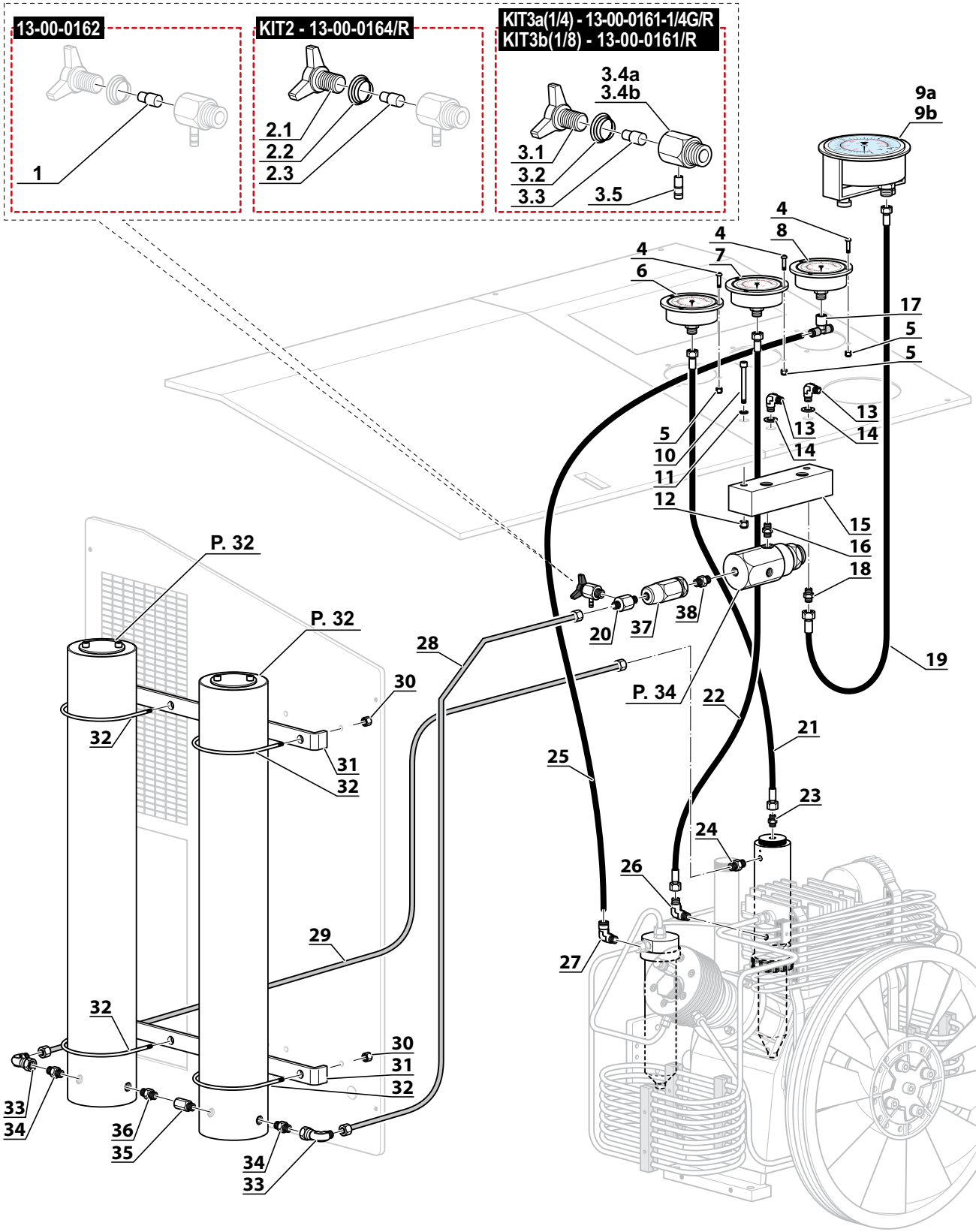

SCARICO CONDENSA - CONDENSATE DISCHARGE

Mod: Standard - Tech - MiniTech

Rif. Pos.	Q.tà Q.ty	Codice Code	Descrizione	Description
1	1	13-00-0162	NYLON SCARICO CONDENSA	CONDENSATE DISCHARGE NYLON
KIT2	1	13-00-0164/R	KIT VOLANTINO RUBINETTO SCARICO CONDENSA	CONDENSATE DISCHARGE WHEEL VALVE KIT
2.1	1	13-00-0164	VOLANTINO SCARICO CONDENSA	CONDENSATE DISCHARGE WHEEL
2.2	1	13-00-0163	MOLLA SCARICO CONDENSA	CONDENSATE DISCHARGE SPRING
2.3	1	13-00-0162	NYLON SCARICO CONDENSA	CONDENSATE DISCHARGE NYLON
KIT3a	1	13-00-0161-1/4G/R	KIT RUBINETTO SCARICO CONDENSA 1/4	CONDENSATE DISCHARGE BODY VALVE 1/4 KIT
3.1	1	13-00-0164	VOLANTINO SCARICO CONDENSA	CONDENSATE DISCHARGE WHEEL
3.2	1	13-00-0163	MOLLA SCARICO CONDENSA	CONDENSATE DISCHARGE SPRING
3.3	1	13-00-0162	NYLON SCARICO CONDENSA	CONDENSATE DISCHARGE NYLON
3.4a	1	13-00-0161-1/4G	CORPO RUBINETTO SCARICO CONDENSA 1/4 GAS	CONDENSATE DISCHARGE BODY VALVE 1/4
3.5	1	6-05-004F	BECCUCCIO RUBIN.SCARICO COND.	DRAIN VALVE PIN
KIT3b	1	13-00-0161/R	KIT RUBINETTO SCARICO CONDENSA 1/8 NPT	CONDENSATE DISCHARGE BODY VALVE1/8 NPT KIT
3.1	1	13-00-0164	VOLANTINO SCARICO CONDENSA	CONDENSATE DISCHARGE WHEEL
3.2	1	13-00-0163	MOLLA SCARICO CONDENSA	CONDENSATE DISCHARGE SPRING
3.3	1	13-00-0162	NYLON SCARICO CONDENSA	CONDENSATE DISCHARGE NYLON
3.4b	1	13-00-0161	CORPO RUBINETTO SCARICO CONDENSA 1/8 NPT	CONDENSATE DISCHARGE BODY VALVE1/8 NPT
3.5	1	6-05-004F	BECCUCCIO RUBIN.SCARICO COND.	DRAIN VALVE PIN

SCARICO CONDENSA - CONDENSATE DISCHARGE

Mod: Standard - Tech - MiniTech

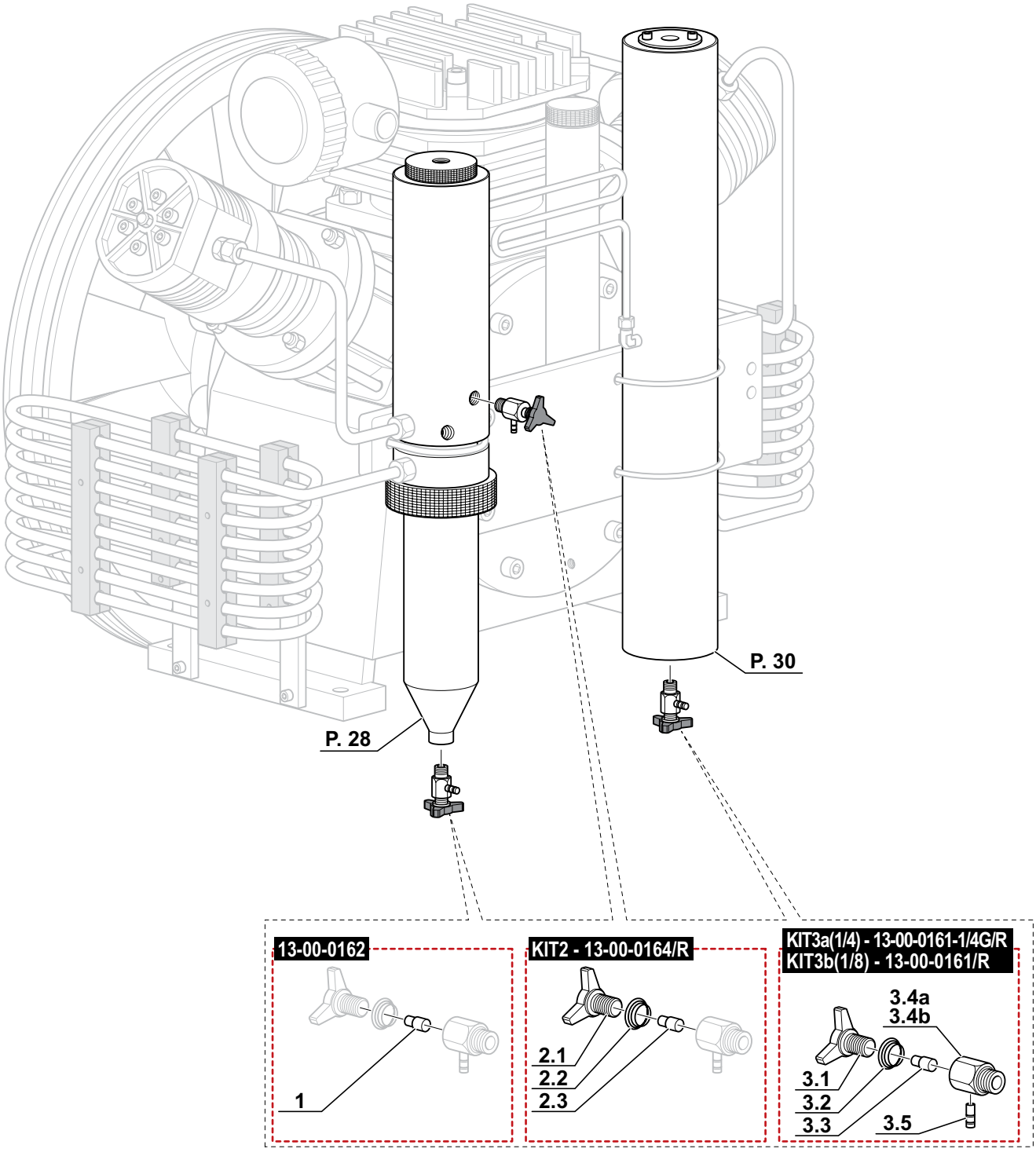

SCARICO CONDENSA - CONDENSATE DISCHARGE

Mod: Compact - Compact M - Compact Evo

Rif. Pos.	Q.tà Q.ty	Codice Code	Descrizione	Description
1	1	13-00-0162	NYLON SCARICO CONDENSA	CONDENSATE DISCHARGE NYLON
KIT2	1	13-00-0164/R	KIT VOLANTINO RUBINETTO SCARICO CONDENSA	CONDENSATE DISCHARGE WHEEL VALVE KIT
2.1	1	13-00-0164	VOLANTINO SCARICO CONDENSA	CONDENSATE DISCHARGE WHEEL
2.2	1	13-00-0163	MOLLA SCARICO CONDENSA	CONDENSATE DISCHARGE SPRING
2.3	1	13-00-0162	NYLON SCARICO CONDENSA	CONDENSATE DISCHARGE NYLON
KIT3a	1	13-00-0161-1/4G/R	KIT RUBINETTO SCARICO CONDENSA 1/4	CONDENSATE DISCHARGE BODY VALVE 1/4 KIT
3.1	1	13-00-0164	VOLANTINO SCARICO CONDENSA	CONDENSATE DISCHARGE WHEEL
3.2	1	13-00-0163	MOLLA SCARICO CONDENSA	CONDENSATE DISCHARGE SPRING
3.3	1	13-00-0162	NYLON SCARICO CONDENSA	CONDENSATE DISCHARGE NYLON
3.4a	1	13-00-0161-1/4G	CORPO RUBINETTO SCARICO CONDENSA 1/4 GAS	CONDENSATE DISCHARGE BODY VALVE 1/4
3.5	1	6-05-004F	BECCUCCIO RUBIN.SCARICO COND.	DRAIN VALVE PIN
KIT3b	1	13-00-0161/R	KIT RUBINETTO SCARICO CONDENSA 1/8 NPT	CONDENSATE DISCHARGE BODY VALVE1/8 NPT KIT
3.1	1	13-00-0164	VOLANTINO SCARICO CONDENSA	CONDENSATE DISCHARGE WHEEL
3.2	1	13-00-0163	MOLLA SCARICO CONDENSA	CONDENSATE DISCHARGE SPRING
3.3	1	13-00-0162	NYLON SCARICO CONDENSA	CONDENSATE DISCHARGE NYLON
3.4b	1	13-00-0161	CORPO RUBINETTO SCARICO CONDENSA 1/8 NPT	CONDENSATE DISCHARGE BODY VALVE1/8 NPT
3.5	1	6-05-004F	BECCUCCIO RUBIN.SCARICO COND.	DRAIN VALVE PIN
KIT4	1	13-00-0505/N/R	KIT BLOCCHETTO VALVOLA SCARICO CONDENSA	CONDENSATE DISCHARGE VALVE
4.1	12	36-07-070	VITE TCEIZN M5x10-8.8 MCH36	SCREW TCEIZN M5x10-8.8 MCH36
4.2	3	13-00-0506	COPERCHIO CORPO VALVOLA SCAR.	CONDENSATE DISCHARGE BODY VALVE CAP
4.3	3	OR-2118	O RING 2118 70-75 SH (29.87x1.78)	O RING 2118 70-75 SH (29.87x1.78)
4.4	3	OR-2018	O RING 2018 70-75 SH (4,48X1,78)	O RING 2018 70-75 SH (4,48X1,78)
4.5	3	13-00-0507/A	PISTONE CIECO VALV. SCAR.CONDENSA 3 VIE	CONDENSATE DISCHARGE VALVE PISTON
4.6	3	OR-2100	O RING 2100 NBR 70SH	O RING 2100 NBR 70SH
4.7	3	SC000337/C/R	RACC. CORPO INPUT RIDUTT. DI PRESS. 300/200 BAR	PRESSURE REDUCER BODY INPUT 300/200BAR
4.8	1	13-00-0505/N	CORPO VALVOLA SCARICO CONDENSA 3 VIE MCH13/16 50X60	CONDENSATE DISCHARGE BODY VALVE MCH13-16
5	1	VITE0645I	VITE T.C.E. INOX 6x45	SCREW T.C.E. INOX 6x45
6	1	13-00-0142	RACC. DIRITTO M 1/8 NPT - M 1/8 NPT	STRAIGHT FITTING M 1/8 NPT - M 1/8 NPT
7	1	13-04-0221/N	ELETTR. LP SCARICO COND. 3 VIE NC 1/8" NBR D.2 V.220/50-60	LP SOLENOID VALVE
8	1	13-03-0179	VALVOLA SICUREZZA 2° STADIO	2ND STAGE SAFETY VALVE
9	1	RACC/E2L31C08	RACC. L MASCHIO GIREVOLE CONICO E2L31C08 1/8 M TUBO 6	TURNING FITTING 1/8M TUBE6
10	3	RACC/E2001007W	RACC. DIRITTO CILINDRICO MASCHIO CON OR 1/8 E2001007W	1/8 E2001007W FITTING WITH OR
11	5	13-00-0174E	RACC. 1/8 NPT - TUBO 6 mm ERMETO	STRAIGHT FITTING 1/8 NPT PIPE 6mm ERMETO
12	2	13-04-0285/SS	TUBO INOX BLOCCHETTO-FILTRO COMPACT	BLOCK-FILTER INOX HOSE COMPACT
13	1	13-04-0284/SS	TUBO INOX BLOCCHETTO-SEPARATORE INF COMPACT	BLOCK-SEPARATOR DOWN INOX HOSE COMPACT
14	1	TUBRILSAN6X4	TUBO RILSAN 6x4	RILSAN HOSE 6X4
15	0,6	TUBRILSAN6X4/N	TUBO RILSAN NERO 6x4 PER ALTE TEMPERATURE	BLACK RILSAN HOSE 6x4 HIGHT TEMPERATURE
16	0,9	TUBRILSAN6X4/N	TUBO RILSAN NERO 6x4 PER ALTE TEMPERATURE	BLACK RILSAN HOSE 6x4 HIGHT TEMPERATURE
17	1	13-00-0025E	RACCORDO 1/4 G -TUBO 6mm DIRITTO ERMETO	FITTING 1/4 G -PIPE 6mm ERMETO
18	1	GUAR1319	RONDELLA 1/4 IN RAME	COPPER WASHER 1/4
19	1	TAN/80/5-2L	TANICA SC 5l 2 FORI 18mm LATERALI	SC TANK 5l 2HOLE 18mm SIDE
20	1	RACC/R2L26006Y	RACCORDO E2L26006 Y MASCHIO TECNOPOLIMERO 2 X TUBO 6 1 1/8G	FITTING E2L26006 Y 2 X TUBE RILSAN6mm 1 1/8G
21	1	RACC/E2L01007	RACC. DIRITTO CILINDRICO MASCHIO CON OR E2L01007 1/8M TUBO 6	FITTING WITH OR E2L01007 1/8M TUBE 6
22	1	RACC25531/83/8	RACCORDO 2553 1/8 3/8	2553 1/8 3/8 FITTING
23	1	SILENZ/2931	SILENZIATORE 2931 3/8 F	2931 3/8 F SILENCER
24	1	13-04-0286/SS	TUBO INOX BLOCCHETTO-SEPARATORE SUP COMPACT	BLOCK-SEPARATOR UP INOX HOSE COMPACT

SCARICO CONDENSA - CONDENSATE DISCHARGE

Mod: Compact - Compact M - Compact Evo

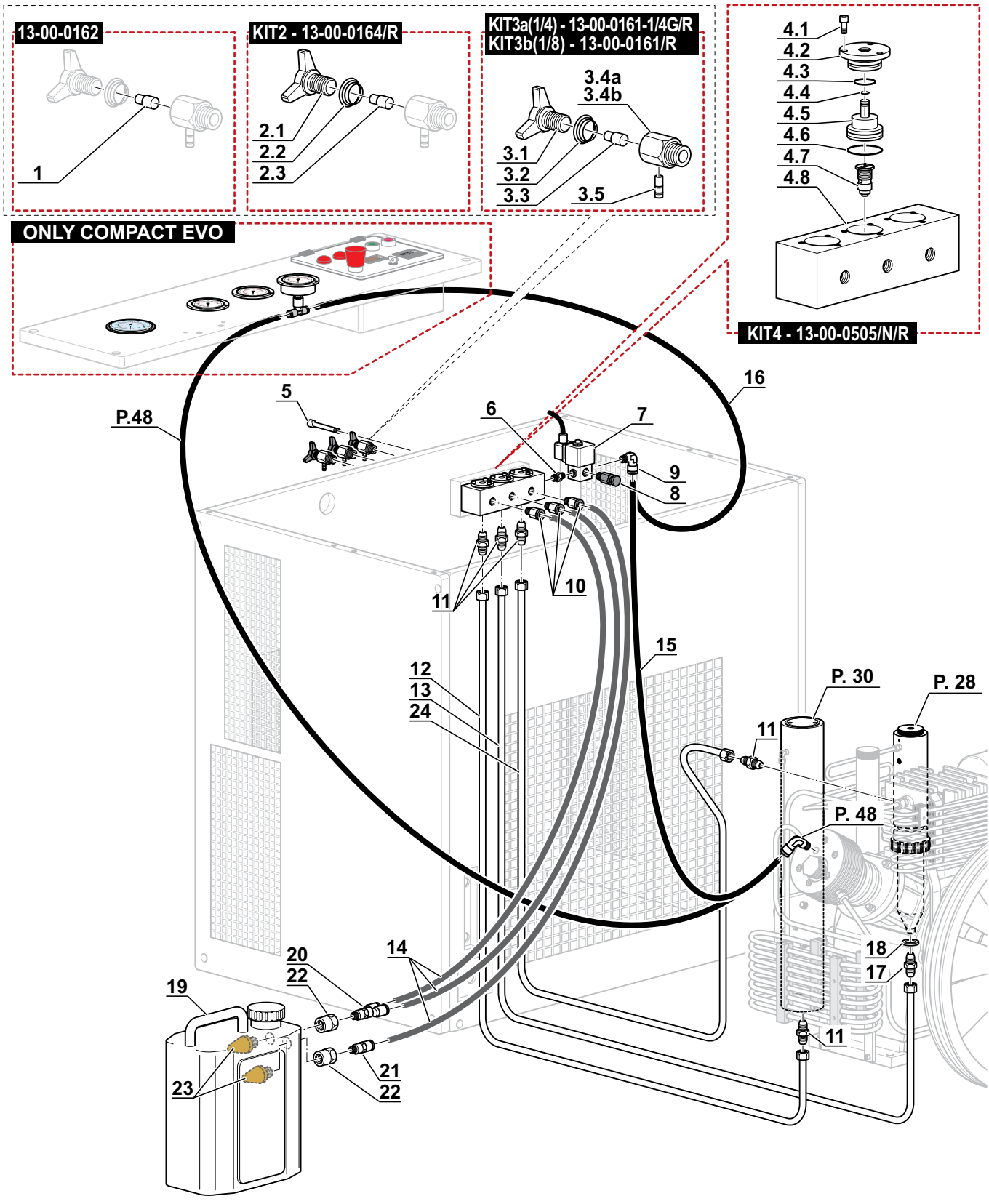

SCARICO CONDENSA - CONDENSATE DISCHARGE

Mod: Mini Silent

Rif. Pos.	Q.tà Q.ty	Codice Code	Descrizione	Description
1	1	13-00-0162	NYLON SCARICO CONDENSA	CONDENSATE DISCHARGE NYLON
KIT2	1	13-00-0164/R	KIT VOLANTINO RUBINETTO SCARICO CONDENSA	CONDENSATE DISCHARGE WHEEL VALVE KIT
2.1	1	13-00-0164	VOLANTINO SCARICO CONDENSA	CONDENSATE DISCHARGE WHEEL
2.2	1	13-00-0163	MOLLA SCARICO CONDENSA	CONDENSATE DISCHARGE SPRING
2.3	1	13-00-0162	NYLON SCARICO CONDENSA	CONDENSATE DISCHARGE NYLON
KIT3a	1	13-00-0161-1/4G/R	KIT RUBINETTO SCARICO CONDENSA 1/4	CONDENSATE DISCHARGE BODY VALVE 1/4 KIT
3.1	1	13-00-0164	VOLANTINO SCARICO CONDENSA	CONDENSATE DISCHARGE WHEEL
3.2	1	13-00-0163	MOLLA SCARICO CONDENSA	CONDENSATE DISCHARGE SPRING
3.3	1	13-00-0162	NYLON SCARICO CONDENSA	CONDENSATE DISCHARGE NYLON
3.4a	1	13-00-0161-1/4G	CORPO RUBINETTO SCARICO CONDENSA 1/4 GAS	CONDENSATE DISCHARGE BODY VALVE 1/4
3.5	1	6-05-004F	BECCUCCIO RUBIN.SCARICO COND.	DRAIN VALVE PIN
KIT3b	1	13-00-0161/R	KIT RUBINETTO SCARICO CONDENSA 1/8 NPT	CONDENSATE DISCHARGE BODY VALVE1/8 NPT KIT
3.1	1	13-00-0164	VOLANTINO SCARICO CONDENSA	CONDENSATE DISCHARGE WHEEL
3.2	1	13-00-0163	MOLLA SCARICO CONDENSA	CONDENSATE DISCHARGE SPRING
3.3	1	13-00-0162	NYLON SCARICO CONDENSA	CONDENSATE DISCHARGE NYLON
3.4b	1	13-00-0161	CORPO RUBINETTO SCARICO CONDENSA 1/8 NPT	CONDENSATE DISCHARGE BODY VALVE1/8 NPT
3.5	1	6-05-004F	BECCUCCIO RUBIN.SCARICO COND.	DRAIN VALVE PIN
KIT4	1	13-00-0505/N/R	KIT BLOCCHETTO VALVOLA SCARICO CONDENSA	CONDENSATE DISCHARGE VALVE
4.1	12	36-07-070	VITE TCEIZN M5x10-8.8 MCH36	SCREW TCEIZN M5x10-8.8 MCH36
4.2	3	13-00-0506	COPERCHIO CORPO VALVOLA SCAR.	CONDENSATE DISCHARGE BODY VALVE CAP
4.3	3	OR-2118	O RING 2118 70-75 SH (29.87x1.78)	O RING 2118 70-75 SH (29.87x1.78)
4.4	3	OR-2018	O RING 2018 70-75 SH (4,48X1,78)	O RING 2018 70-75 SH (4,48X1,78)
4.5	3	13-00-0507/A	PISTONE CIECO VALV. SCAR.CONDENSA 3 VIE	CONDENSATE DISCHARGE VALVE PISTON
4.6	3	OR-2100	O RING 2100 NBR 70SH	O RING 2100 NBR 70SH
4.7	3	SC000337/C/R	RACC. CORPO INPUT RIDUTT. DI PRESS. 300/200 BAR	PRESSURE REDUCER BODY INPUT 300/200BAR
4.8	1	13-00-0505/N	CORPO VALVOLA SCARICO CONDENSA 3 VIE MCH13/16 50X60	CONDENSATE DISCHARGE BODY VALVE MCH13-16
5	1	VITE0645I	VITE T.C.E. INOX 6x45	SCREW T.C.E. INOX 6x45
6	1	13-00-0142	RACC. DIRITTO M 1/8 NPT - M 1/8 NPT	STRAIGHT FITTING M 1/8 NPT - M 1/8 NPT
7	1	13-04-0221/N	ELETTR. LP SCARICO COND. 3 VIE NC 1/8" NBR D.2 V.220/50-60	LP SOLENOID VALVE
8	1	13-03-0179	VALVOLA SICUREZZA 2° STADIO	2ND STAGE SAFETY VALVE
9	1	RACC/E2L31C08	RACC. L MASCHIO GIREVOLE CONICO E2L31C08 1/8 M TUBO 6	TURNING FITTING 1/8M TUBE6
10	3	RACC/E2001007W	RACC. DIRITTO CILINDRICO MASCHIO CON OR 1/8 E2001007W	1/8 E2001007W FITTING WITH OR
11	3	13-00-0174	Racc. 1/8 NPT 7/16 Tubo 6 mm	STRAIGHT 1/8 PIPE FITTING 6
12	2	13-04-0284/AIR	TUBO HP 600mm AIR	HP 600mm AIR TUBE
13	1	13-04-0322/AIR	TUBO HP 500mm AIR	HP 500mm AIR HOSE
14	0,5	TUBRILSAN6X4	TUBO RILSAN 6x4	RILSAN HOSE 6X4
15	0,5	TUBRILSAN6X4/N	TUBO RILSAN NERO 6x4 PER ALTE TEMPERATURE	BLACK RILSAN HOSE 6x4 HIGHT TEMPERATURE
16	1	RACC/E2006009W	RACC. L MASCHIO GIREVOLE CON OR E2006009W 1/8 TUBO 8	TURNING FITTING 90° WITH OR E2006009W 1/8 TUBE 8
17	1	36-07-008	RACCORDO 90° 1/4NPT - 7/16	FITTING 90° 1/4NPT - 7/16
18	2	13-00-0144	RACCORDO 90° 1/8 - 7/16 TUBO 6mm	FITTING 90° 1/8 - TUBO 6mm
19	1	TAN/80/5-2L	TANICA SC 5l 2 FORI 18mm LATERALI	SC TANK 5l 2HOLE 18mm SIDE
20	1	RACC/R2L26006Y	RACCORDO E2L26006 Y MASCHIO TECNOPOLIMERO 2 X TUBO 6 1 1/8G	FITTING E2L26006 Y 2 X TUBE RILSAN6mm 1 1/8G
21	1	RACC/E2L01007	RACC. DIRITTO CILINDRICO MASCHIO CON OR E2L01007 1/8M TUBO 6	FITTING WITH OR E2L01007 1/8M TUBE 6
22	1	RACC25531/83/8	RACCORDO 2553 1/8 3/8	2553 1/8 3/8 FITTING
23	1	SILENZ/2931	SILENZIATORE 2931 3/8 F	2931 3/8 F SILENCER
24	1	13-04-0327/AIR	TUBO HP 700mm AIR	HP 700mm AIR HOSE

SCARICO CONDENSA - CONDENSATE DISCHARGE

Mod: Mini Silent

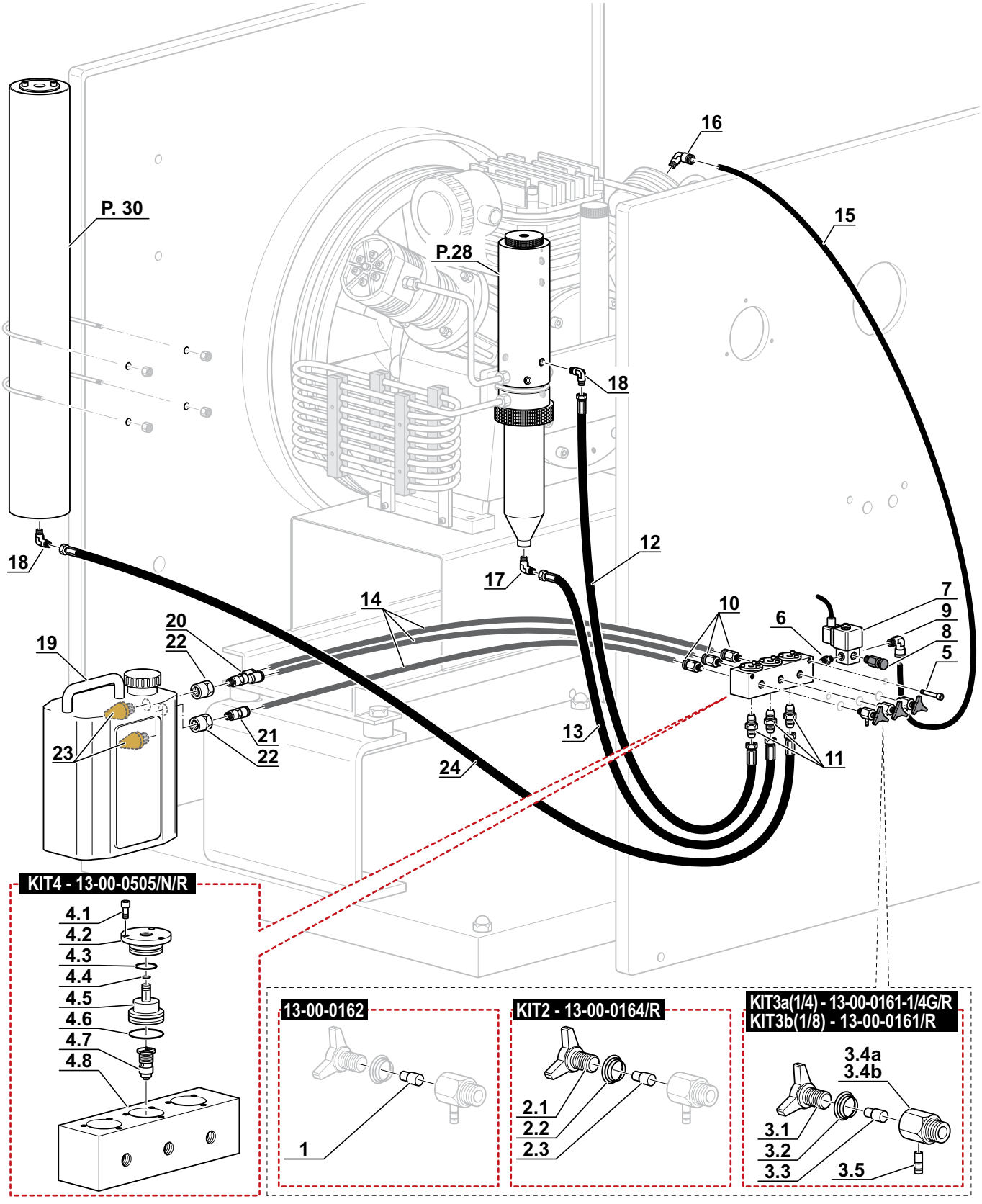

SCARICO CONDENSA - CONDENSATE DISCHARGE

Mod: Super Silent Evo

Rif. Pos.	Q.tà Q.ty	Codice Code	Descrizione	Description
1	1	13-00-0162	NYLON SCARICO CONDENSA	CONDENSATE DISCHARGE NYLON
KIT2	1	13-00-0164/R	KIT VOLANTINO RUBINETTO SCARICO CONDENSA	CONDENSATE DISCHARGE WHEEL VALVE KIT
2.1	1	13-00-0164	VOLANTINO SCARICO CONDENSA	CONDENSATE DISCHARGE WHEEL
2.2	1	13-00-0163	MOLLA SCARICO CONDENSA	CONDENSATE DISCHARGE SPRING
2.3	1	13-00-0162	NYLON SCARICO CONDENSA	CONDENSATE DISCHARGE NYLON
KIT3a	1	13-00-0161-1/4G/R	KIT RUBINETTO SCARICO CONDENSA 1/4	CONDENSATE DISCHARGE BODY VALVE 1/4 KIT
3.1	1	13-00-0164	VOLANTINO SCARICO CONDENSA	CONDENSATE DISCHARGE WHEEL
3.2	1	13-00-0163	MOLLA SCARICO CONDENSA	CONDENSATE DISCHARGE SPRING
3.3	1	13-00-0162	NYLON SCARICO CONDENSA	CONDENSATE DISCHARGE NYLON
3.4a	1	13-00-0161-1/4G	CORPO RUBINETTO SCARICO CONDENSA 1/4 GAS	CONDENSATE DISCHARGE BODY VALVE 1/4
3.5	1	6-05-004F	BECCUCCIO RUBIN.SCARICO COND.	DRAIN VALVE PIN
KIT3b	1	13-00-0161/R	KIT RUBINETTO SCARICO CONDENSA 1/8 NPT	CONDENSATE DISCHARGE BODY VALVE1/8 NPT KIT
3.1	1	13-00-0164	VOLANTINO SCARICO CONDENSA	CONDENSATE DISCHARGE WHEEL
3.2	1	13-00-0163	MOLLA SCARICO CONDENSA	CONDENSATE DISCHARGE SPRING
3.3	1	13-00-0162	NYLON SCARICO CONDENSA	CONDENSATE DISCHARGE NYLON
3.4b	1	13-00-0161	CORPO RUBINETTO SCARICO CONDENSA 1/8 NPT	CONDENSATE DISCHARGE BODY VALVE1/8 NPT
3.5	1	6-05-004F	BECCUCCIO RUBIN.SCARICO COND.	DRAIN VALVE PIN
KIT4	1	13-00-0505/N/R	KIT BLOCCHETTO VALVOLA SCARICO CONDENSA	CONDENSATE DISCHARGE VALVE
4.1	12	36-07-070	VITE TCEIZN M5x10-8.8 MCH36	SCREW TCEIZN M5x10-8.8 MCH36
4.2	3	13-00-0506	COPERCHIO CORPO VALVOLA SCAR.	CONDENSATE DISCHARGE BODY VALVE CAP
4.3	3	OR-2118	O RING 2118 70-75 SH (29.87x1.78)	O RING 2118 70-75 SH (29.87x1.78)
4.4	3	OR-2018	O RING 2018 70-75 SH (4,48X1,78)	O RING 2018 70-75 SH (4,48X1,78)
4.5	3	13-00-0507/A	PISTONE CIECO VALV. SCAR.CONDENSA 3 VIE	CONDENSATE DISCHARGE VALVE PISTON
4.6	3	OR-2100	O RING 2100 NBR 70SH	O RING 2100 NBR 70SH
4.7	3	SC000337/C/R	RACC. CORPO INPUT RIDUTT. DI PRESS. 300/200 BAR	PRESSURE REDUCER BODY INPUT 300/200BAR
4.8	1	13-00-0505/N	CORPO VALVOLA SCARICO CONDENSA 3 VIE MCH13/16 50X60	CONDENSATE DISCHARGE BODY VALVE MCH13-16
5	1	VITE0645I	VITE T.C.E. INOX 6x45	SCREW T.C.E. INOX 6x45
6	1	13-00-0142	RACC. DIRITTO M 1/8 NPT - M 1/8 NPT	STRAIGHT FITTING M 1/8 NPT - M 1/8 NPT
7	1	13-04-0221/N	ELETTR. LP SCARICO COND. 3 VIE NC 1/8" NBR D.2 V.220/50-60	LP SOLENOID VALVE
8	1	13-03-0179	VALVOLA SICUREZZA 2° STADIO	2ND STAGE SAFETY VALVE
9	1	RACC/E2L31C08	RACC. L MASCHIO GIREVOLE CONICO E2L31C08 1/8 M TUBO 6	TURNING FITTING 1/8M TUBE6
10	3	RACC/E2001007W	RACC. DIRITTO CILINDRICO MASCHIO CON OR 1/8 E2001007W	1/8 E2001007W FITTING WITH OR
11	4	13-00-0174	Racc. 1/8 NPT 7/16 Tubo 6 mm	STRAIGHT 1/8 PIPE FITTING 6
12	2	13-04-0287/SS	TUBO INOX BLOCCHETTO-SEPARATORE SUP S.S.E.	BLOCK-SEPARATOR UP INOX HOSE S.S.E.
13	1	13-04-0322/SS	TUBO INOX BLOCCHETTO-SEPARATORE INF S.S.E.	BLOCK-SEPARATOR DOWN INOX HOSE S.S.E.
14	3	13-04-0199/SS	TUBO INOX BLOCCHETTO-FILTRO S.S.E.	BLOCK-FILTER INOX HOSE S.S.E.
15	1	TUBRILSAN6X4/N	TUBO RILSAN NERO 6x4 PER ALTE TEMPERATURE	BLACK RILSAN HOSE 6x4 HIGHT TEMPERATURE
16	0,8	TUBRILSAN6X4	TUBO RILSAN 6x4	RILSAN HOSE 6X4
17	1	13-00-0025E	RACCORDO 1/4 G -TUBO 6mm DIRITTO ERMETO	FITTING 1/4 G -PIPE 6mm ERMETO
18	1	RACC/E231506L18	RACCORDO E231-506L 1/8' NPT TUBO 6 LARGA	FITTING E231-506L 1/8' NPT TUBE 6 LARGA
19	1	RACC/E2005007W	RACC. L MASCHIO GIREVOLE E2005007W 1/8 TUBO 6	E2005007W 1/8 TUBE 6 TURNING FITTING
20	1	13-07-074	SERBATOIO SCARICO CONDENSA Mod.SILENT	CONDENSATE DISCHARGE TANK Mod.SILENT
21	4	RON6Z	RONDELLA PIANA ZINC. M6	PLAIN WASHER ZINC. M6 DIN 125A
22	4	VITE0620	VITE T.C.E. ZINC. 6x20 DIN912	SCREW T.C.E. ZINC. 6X20 DIN912
23	1	FASC/3B/17/29	FASCETTA STRING. 3B D.17/29	CLAMP 3B D.17/29
24	1	T-SP-16X23-750	TUBO SPIRALATO PER ALIMENTI 16X23 L=750	FOOD SPIRAL HOSE 16X23 L=750
25	1	TAN/80/5-1T	TANICA SC 5l 1 FORO 25mm SU TAPPO	SC TANK 5l 1HOLE 25mm PLUG
26	1	GUAR1319	RONDELLA 1/4 IN RAME	COPPER WASHER 1/4

SCARICO CONDENSA - CONDENSATE DISCHARGE

Mod: Super Silent Evo

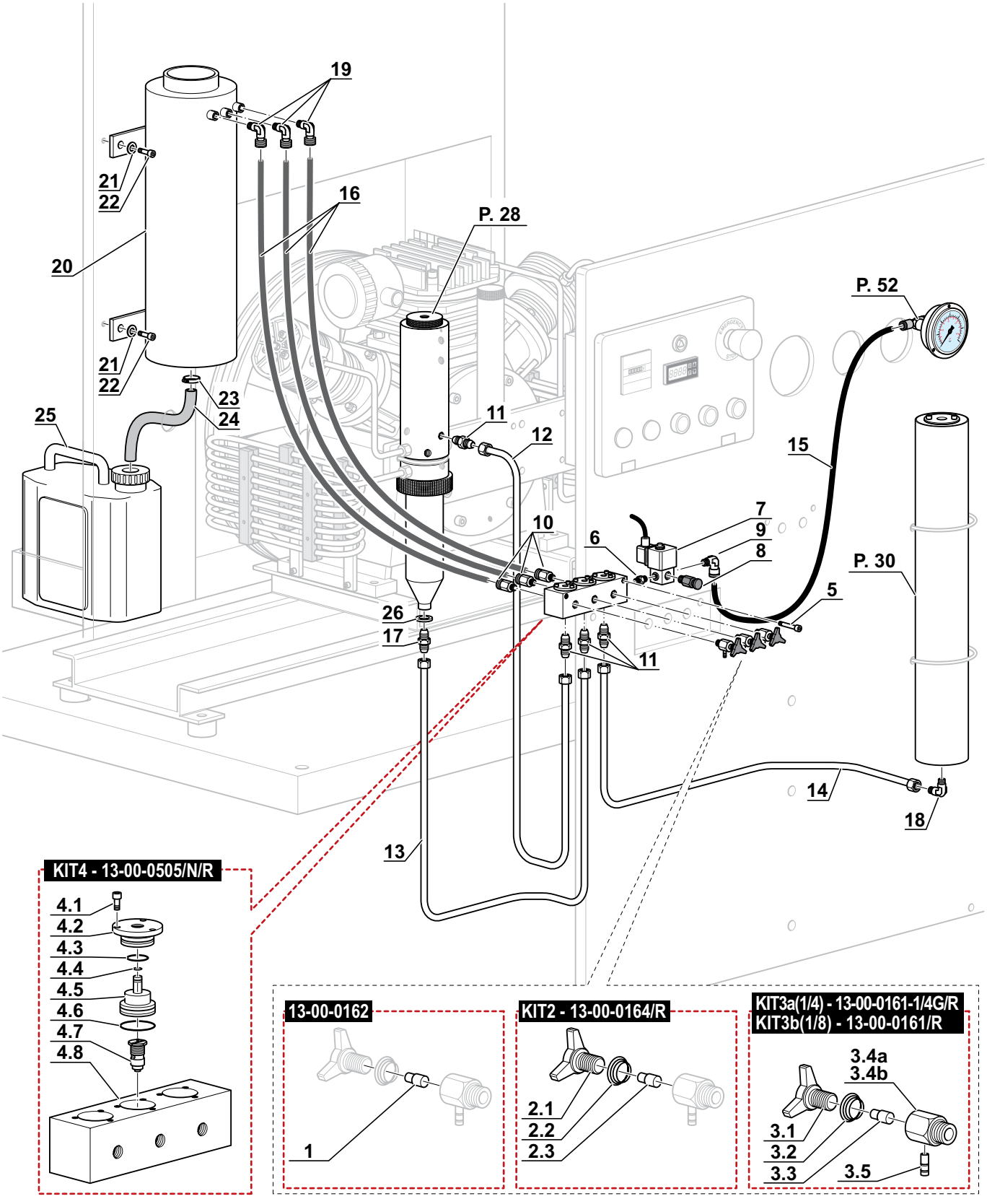

SCARICO CONDENSA - CONDENSATE DISCHARGE

Mod: MCH26-32/ET Compact

Rif. Pos.	Q.tà Q.ty	Codice Code	Descrizione	Description
1	1	13-00-0162	NYLON SCARICO CONDENSA	CONDENSATE DISCHARGE NYLON
KIT2	1	13-00-0164/R	KIT VOLANTINO RUBINETTO SCARICO CONDENSA	CONDENSATE DISCHARGE WHEEL VALVE KIT
2.1	1	13-00-0164	VOLANTINO SCARICO CONDENSA	CONDENSATE DISCHARGE WHEEL
2.2	1	13-00-0163	MOLLA SCARICO CONDENSA	CONDENSATE DISCHARGE SPRING
2.3	1	13-00-0162	NYLON SCARICO CONDENSA	CONDENSATE DISCHARGE NYLON
KIT3a	1	13-00-0161-1/4G/R	KIT RUBINETTO SCARICO CONDENSA 1/4	CONDENSATE DISCHARGE BODY VALVE 1/4 KIT
3.1	1	13-00-0164	VOLANTINO SCARICO CONDENSA	CONDENSATE DISCHARGE WHEEL
3.2	1	13-00-0163	MOLLA SCARICO CONDENSA	CONDENSATE DISCHARGE SPRING
3.3	1	13-00-0162	NYLON SCARICO CONDENSA	CONDENSATE DISCHARGE NYLON
3.4a	1	13-00-0161-1/4G	CORPO RUBINETTO SCARICO CONDENSA 1/4 GAS	CONDENSATE DISCHARGE BODY VALVE 1/4
3.5	1	6-05-004F	BECCUCCIO RUBIN.SCARICO COND.	DRAIN VALVE PIN
KIT3b	1	13-00-0161/R	KIT RUBINETTO SCARICO CONDENSA 1/8 NPT	CONDENSATE DISCHARGE BODY VALVE1/8 NPT KIT
3.1	1	13-00-0164	VOLANTINO SCARICO CONDENSA	CONDENSATE DISCHARGE WHEEL
3.2	1	13-00-0163	MOLLA SCARICO CONDENSA	CONDENSATE DISCHARGE SPRING
3.3	1	13-00-0162	NYLON SCARICO CONDENSA	CONDENSATE DISCHARGE NYLON
3.4b	1	13-00-0161	CORPO RUBINETTO SCARICO CONDENSA 1/8 NPT	CONDENSATE DISCHARGE BODY VALVE1/8 NPT
3.5	1	6-05-004F	BECCUCCIO RUBIN.SCARICO COND.	DRAIN VALVE PIN
KIT4	1	13-00-0505/N/R	KIT BLOCCHETTO VALVOLA SCARICO CONDENSA	CONDENSATE DISCHARGE VALVE
4.1	12	36-07-070	VITE TCEIZN M5x10-8.8 MCH36	SCREW TCEIZN M5x10-8.8 MCH36
4.2	3	13-00-0506	COPERCHIO CORPO VALVOLA SCAR.	CONDENSATE DISCHARGE BODY VALVE CAP
4.3	3	OR-2118	O RING 2118 70-75 SH (29.87x1.78)	O RING 2118 70-75 SH (29.87x1.78)
4.4	3	OR-2018	O RING 2018 70-75 SH (4,48X1,78)	O RING 2018 70-75 SH (4,48X1,78)
4.5	3	13-00-0507/A	PISTONE CIECO VALV. SCAR.CONDENSA 3 VIE	CONDENSATE DISCHARGE VALVE PISTON
4.6	3	OR-2100	O RING 2100 NBR 70SH	O RING 2100 NBR 70SH
4.7	3	SC000337/C/R	RACC. CORPO INPUT RIDUTT. DI PRESS. 300/200 BAR	PRESSURE REDUCER BODY INPUT 300/200BAR
4.8	1	13-00-0505/N	CORPO VALVOLA SCARICO CONDENSA 3 VIE MCH13/16 50X60	CONDENSATE DISCHARGE BODY VALVE MCH13-16
5	8	VITE0620	VITE T.C.E.ZINC. 6X20 DIN912	SCREW T.C.E. 6X20 ZINC.
6	2	13-00-0142	RACC. DIRITTO M 1/8 NPT - M 1/8 NPT	STRAIGHT FITTING M 1/8 NPT - M 1/8 NPT
7	2	13-04-0221/N	ELETTR. LP SCARICO COND. 3 VIE NC 1/8" NBR D.2 V.220/50-60	LP SOLENOID VALVE
8	2	13-03-0179	VALVOLA SICUREZZA 2° STADIO	2ND STAGE SAFETY VALVE
9	2	RACC/E2L31C08	RACC. L MASCHIO GIREVOLE CONICO E2L31C08 1/8 M TUBO 6	TURNING FITTING 1/8M TUBE6
10	6	RACC/E2001007W	RACC. DIRITTO CILINDRICO MASCHIO CON OR 1/8 E2001007W	1/8 E2001007W FITTING WITH OR
11	3	RACC/PASS/6	RACCORDO PASSAPARETE RAPIDO DIAM.6	THROUGH-WALL FITTING TUBE 6X4 RILSAN
12	2	RACC/E2006009W	RACC. L MASCHIO GIREVOLE CON OR E2006009W 1/8 TUBO 8	TURNING FITTING 90° WITH OR E2006009W 1/8 TUBE 8
13	0,4	TUBRILSAN6X4/N	TUBO RILSAN NERO 6x4 PER ALTE TEMPERATURE	BLACK RILSAN HOSE 6x4 HIGHT TEMPERATURE
14	0,4	TUBRILSAN6X4	TUBO RILSAN 6x4	RILSAN HOSE 6x4
15	1,2	TUBRILSAN6X4	TUBO RILSAN 6x4	RILSAN HOSE 6x4
16	2	13-04-0219/AIR	TUBO HP 400mm AIR	HP 400mm AIR HOSE
17	2	36-07-008	RACCORDO 90° 1/4NPT - 7/16	FITTING 90° 1/4NPT - 7/16
18	10	13-00-0144	RACCORDO 90° 1/8 - 7/16 TUBO 6mm	FITTING 90° 1/8 - TUBO 6mm
19	1	13-04-0285/AIR	TUBO HP R8 800mm AIR	HP R8 800mm AIR HOSE
20	3	RACC/R2L26006Y	RACCORDO E2L26006 Y MASCHIO TECNOPOLIMERO 2 X TUBO 6 1 1/8G	FITTING E2L26006 Y 2 X TUBE RILSAN6mm 1 1/8G
21	1	TAN/80/5-3L	TANICA SC 5l 3 FORI 18mm LATERALI	SC TANK 5l 3HOLE 18mm SIDE
22	3	RACC25531/83/8	RACCORDO 2553 1/8 3/8	2553 1/8 3/8 FITTING
23	3	SILENZ/2931	SILENZIATORE 2931 3/8 F	2931 3/8 F SILENCER
24	2	13-04-0284/AIR	TUBO HP 600mm AIR	HP 600mm AIR HOSE
25	1	13-04-0327/AIR	TUBO HP 700mm AIR	HP 700mm AIR HOSE
26	0,9	TUBRILSAN6X4	TUBO RILSAN 6x4	RILSAN HOSE 6x4

SCARICO CONDENSA - CONDENSATE DISCHARGE

Mod: MCH26-32/ET Compact

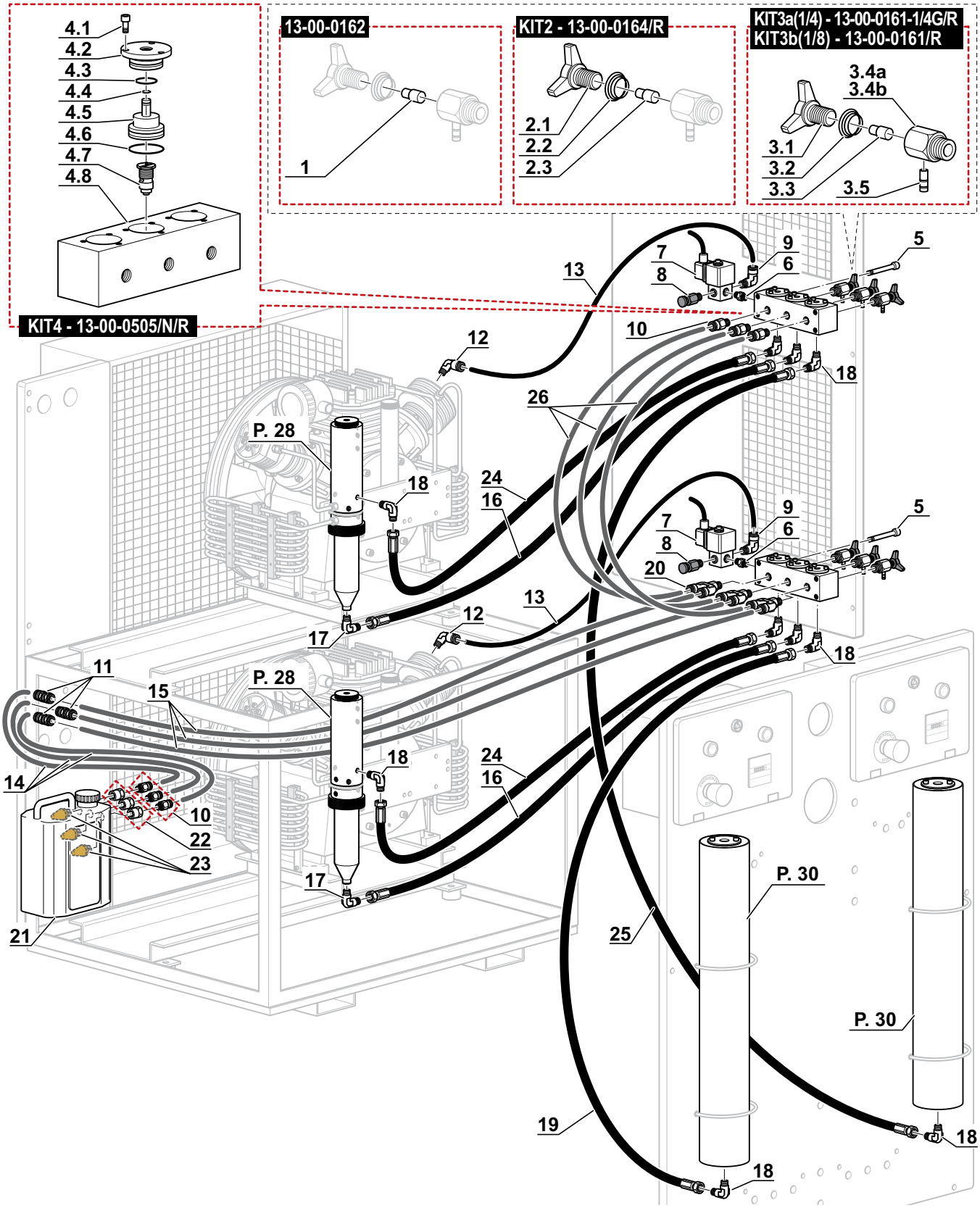

SCARICO CONDENSA - CONDENSATE DISCHARGE

Mod: Mark1 - Mark2

Rif. Pos.	Q.tà Q.ty	Codice Code	Descrizione	Description
1	1	13-00-0162	NYLON SCARICO CONDENSA	CONDENSATE DISCHARGE NYLON
KIT2	1	13-00-0164/R	KIT VOLANTINO RUBINETTO SCARICO CONDENSA	CONDENSATE DISCHARGE WHEEL VALVE KIT
2.1	1	13-00-0164	VOLANTINO SCARICO CONDENSA	CONDENSATE DISCHARGE WHEEL
2.2	1	13-00-0163	MOLLA SCARICO CONDENSA	CONDENSATE DISCHARGE SPRING
2.3	1	13-00-0162	NYLON SCARICO CONDENSA	CONDENSATE DISCHARGE NYLON
KIT3a	1	13-00-0161-1/4G/R	KIT RUBINETTO SCARICO CONDENSA 1/4	CONDENSATE DISCHARGE BODY VALVE 1/4 KIT
3.1	1	13-00-0164	VOLANTINO SCARICO CONDENSA	CONDENSATE DISCHARGE WHEEL
3.2	1	13-00-0163	MOLLA SCARICO CONDENSA	CONDENSATE DISCHARGE SPRING
3.3	1	13-00-0162	NYLON SCARICO CONDENSA	CONDENSATE DISCHARGE NYLON
3.4a	1	13-00-0161-1/4G	CORPO RUBINETTO SCARICO CONDENSA 1/4 GAS	CONDENSATE DISCHARGE BODY VALVE 1/4
3.5	1	6-05-004F	BECCUCCIO RUBIN.SCARICO COND.	DRAIN VALVE PIN
KIT3b	1	13-00-0161/R	KIT RUBINETTO SCARICO CONDENSA 1/8 NPT	CONDENSATE DISCHARGE BODY VALVE1/8 NPT KIT
3.1	1	13-00-0164	VOLANTINO SCARICO CONDENSA	CONDENSATE DISCHARGE WHEEL
3.2	1	13-00-0163	MOLLA SCARICO CONDENSA	CONDENSATE DISCHARGE SPRING
3.3	1	13-00-0162	NYLON SCARICO CONDENSA	CONDENSATE DISCHARGE NYLON
3.4b	1	13-00-0161	CORPO RUBINETTO SCARICO CONDENSA 1/8 NPT	CONDENSATE DISCHARGE BODY VALVE1/8 NPT
3.5	1	6-05-004F	BECCUCCIO RUBIN.SCARICO COND.	DRAIN VALVE PIN
KIT4	1	13-00-0505/N/R	KIT BLOCCHETTO VALVOLA SCARICO CONDENSA	CONDENSATE DISCHARGE VALVE
4.1	12	36-07-070	VITE TCEIZN M5x10-8.8 MCH36	SCREW TCEIZN M5x10-8.8 MCH36
4.2	3	13-00-0506	COPERCHIO CORPO VALVOLA SCAR.	CONDENSATE DISCHARGE BODY VALVE CAP
4.3	3	OR-2118	O RING 2118 70-75 SH (29.87x1.78)	O RING 2118 70-75 SH (29.87x1.78)
4.4	3	OR-2018	O RING 2018 70-75 SH (4,48X1,78)	O RING 2018 70-75 SH (4,48X1,78)
4.5	3	13-00-0507/A	PISTONE CIECO VALV. SCAR.CONDENSA 3 VIE	CONDENSATE DISCHARGE VALVE PISTON
4.6	3	OR-2100	O RING 2100 NBR 70SH	O RING 2100 NBR 70SH
4.7	3	SC000337/C/R	RACC. CORPO INPUT RIDUTT. DI PRESS. 300/200 BAR	PRESSURE REDUCER BODY INPUT 300/200BAR
4.8	1	13-00-0505/N	CORPO VALVOLA SCARICO CONDENSA 3 VIE MCH13/16 50X60	CONDENSATE DISCHARGE BODY VALVE MCH13-16
5	1	VITE0645I	VITE T.C.E. INOX 6x45	SCREW T.C.E. INOX 6x45
6	1	13-00-0142	RACC. DIRITTO M 1/8 NPT - M 1/8 NPT	STRAIGHT FITTING M 1/8 NPT - M 1/8 NPT
7	1	13-04-0221/N	ELETTR. LP SCARICO COND. 3 VIE NC 1/8" NBR D.2 V.220/50-60	LP SOLENOID VALVE
8	1	13-03-0179	VALVOLA SICUREZZA 2° STADIO	2ND STAGE SAFETY VALVE
9	1	RACC/E2L31C08	RACC. L MASCHIO GIREVOLE CONICO E2L31C08 1/8 M TUBO 6	TURNING FITTING 1/8M TUBE6
10	4	RACC/E2001007W	RACC. DIRITTO CILINDRICO MASCHIO CON OR 1/8 E2001007W	1/8 E2001007W FITTING WITH OR
11	1	RACC/E2L31009	RACC. L MASCHIO GIREVOLE CONICO 1/4 M TUBO 6	TURNING FITTING 1/4M TUBE6
12	3	13-00-0174E	Racc. 1/8 NPT Tubo 6 mm	STRAIGHT 1/8 PIPE FITTING 6
13	1	13-04-0284/SS	TUBO INOX 6X1 SEPARATORE INFERIORE-BLOCCHETTO VSC	INOX PIPE 6X1 LOWER SEPARATOR-VSC BLOCK
14	1	13-04-0286/SS	TUBO INOX 6X1 SEPARATORE SUPERIORE-BLOCCHETTO VSC	INOX PIPE 6X1 UPPER SEPARATOR-VSC BLOCK
15	1,0	TUBRILSAN6X4/N	TUBO RILSAN NERO 6x4 PER ALTE TEMPERATURE	BLACK RILSAN HOSE 6x4 HIGHT TEMPERATURE
16	0,9	TUBRILSAN6X4/N	TUBO RILSAN NERO 6x4 PER ALTE TEMPERATURE	BLACK RILSAN HOSE 6x4 HIGHT TEMPERATURE
17	1	13-00-0025E	RACCORDO 1/4 G -TUBO 6mm DIRITTO ERMETO	FITTING 1/4 G -TUBO 6mm ERMETO
18	3	RACC25531/83/8	RACCORDO 2553 1/8 3/8	2553 1/8 3/8 FITTING
19	1	TAN/80/5-2L	TANICA SC 5l 2 FORI 18mm LATERALI	SC TANK 5l 2HOLE 18mm SIDE
20	3	SILENZ/2931	SILENZIATORE 2931 3/8 F	2931 3/8 F SILENCER
21	3	RACC/E2L01007	RACC. DIRITTO CILINDRICO MASCHIO CON OR E2L01007 1/8M TUBO 6	FITTING WITH OR E2L01007 1/8M TUBE 6
22	1,2	TUBRILSAN6X4	TUBO RILSAN 6x4	RILSAN HOSE 6x4

SCARICO CONDENSA - CONDENSATE DISCHARGE

Mod: Mark1 - Mark2

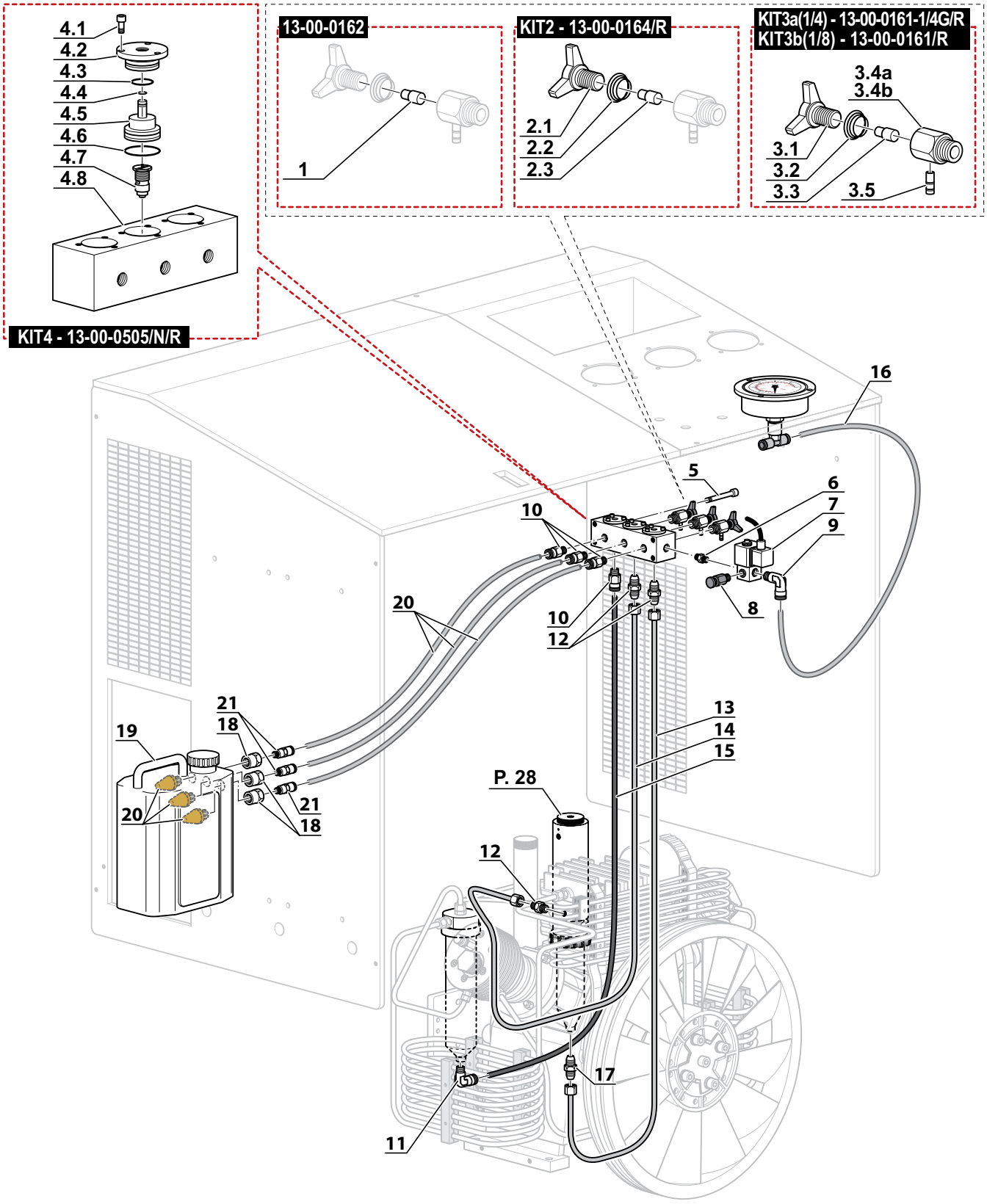

TELAIO - FRAME
Mod: Standard SH

Rif. Pos.	Q.tà Q.ty	Codice Code	Descrizione	Description
KIT1	1	SC1316/ST/SH/AP	Telaio Standard SH	Frame Standard SH
1.1	1	SC1316/ST/SH/AP-1	Carter	Cover
1.2	1	SC1316/ST/SH/AP-2	Maniglia	Handle
1.3	1	SC1316/ST/SH/AP-3	Staffa a "L"	Clamp "L"
1.4	1	SC1316/ST/SH/AP-4	Staffa di supporto	Bracket clamp
1.5	1	SC1316/ST/SH/AP-5	Telaio	Chassis
1.6	4	PIED70SH	Piedino in gomma	Rubber foot
1.7	3	13-00-0041	VITE T.C.E. ZINC. 6x25 DIN912	SCREW T.C.E. ZINC. 6x25 DIN912
1.8	3	13-00-0137	DADO ZINCATO AUTOBLOC. M6	NUT ZINC. AUTOBLOC. M6 DIN 982
1.9	1	VITE0825E	VITE T.E. ZINC. 8X25 DIN933	SCREW T.E. ZINC. 8X25 DIN933
1.10	4	VITE0820	VITE T.C.E. ZINC. 8X20	SCREW T.C.E. ZINC. 8X20
1.11	22	RON8	RONDELLA PIANA ZINCATA M8	WASHER PLANT ZINC. M8
1.12	12	13-00-0101	DADO ZINCATO AUTOBLOC. M8	NUT ZINC. AUTOBLOC. M8
1.13	4	VITE0835	VITE T.C.E. ZINC. 8X35	SCREW T.C.E. ZINC. 8X35
1.14	2	RON6Z	RONDELLA PIANA ZINC. M6	WASHER PLANT ZINC. M6

TELAIO - FRAME
Mod: Standard SH

KIT 1

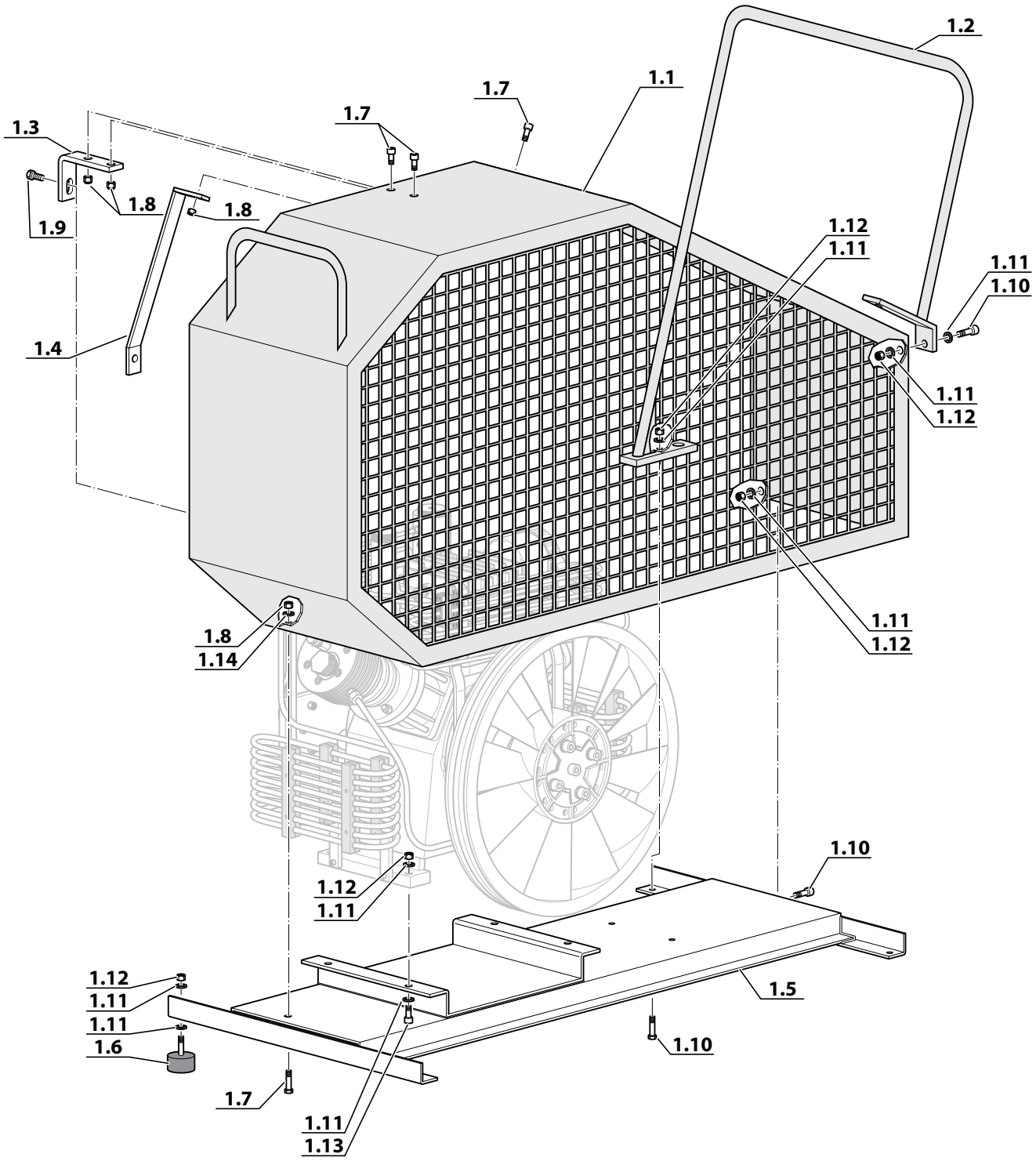

TELAIO - FRAME
Mod: Standard DL-DY

Rif. Pos.	Q.tà Q.ty	Codice Code	Descrizione	Description
KIT1	1	SC1316/ST/D/AP	Telaio Standard DL-DY	Frame Standard DL-DY
1.1	1	SC1316/ST/D/AP-1	Carter	Cover
1.2	1	SC1316/ST/D/AP-2	Maniglia	Handle
1.3	1	SC1316/ST/D/AP-3	Staffa a "L"	Clamp "L"
1.4	4	VITE0835	VITE T.C.E. ZINC. 8X35	SCREW T.C.E. ZINC. 8X35
1.5	1	SC1316/ST/D/AP-4	Telaio	Chassis
1.6	4	PIED70SH	Piedino in gomma	Rubber foot
1.7	3	13-00-0041	VITE T.C.E. ZINC. 6x25 DIN912	SCREW T.C.E. ZINC. 6x25 DIN912
1.8	3	13-00-0137	DADO ZINCATO AUTOBLOC. M6	NUT ZINC. AUTOBLOC. M6 DIN 982
1.9	1	VITE0825E	VITE T.E. ZINC. 8X25 DIN933	SCREW T.E. ZINC. 8X25 DIN933
1.10	4	VITE0820	VITE T.C.E. ZINC. 8X20	SCREW T.C.E. ZINC. 8X20
1.11	22	RON8	RONDELLA PIANA ZINCATA M8	WASHER PLANT ZINC. M8
1.12	12	13-00-0101	DADO ZINCATO AUTOBLOC. M8	NUT ZINC. AUTOBLOC. M8

TELAIO - FRAME
Mod: Standard DL-DY

KIT 1

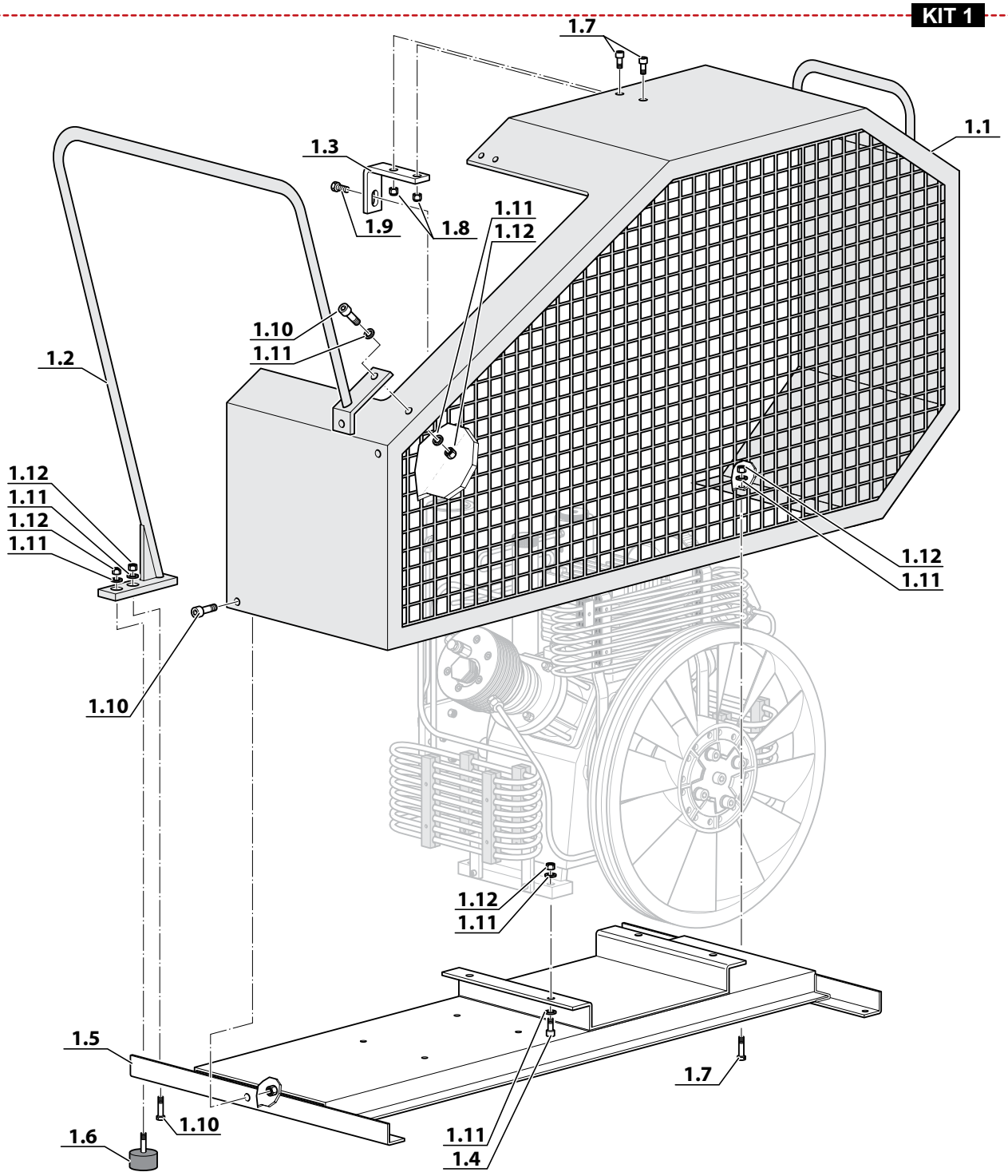

TELAIO - FRAME
Mod: Standard EM-ET

Rif. Pos.	Q.tà Q.ty	Codice Code	Descrizione	Description
KIT1	1	SC1316/ST/EL/AP	Telaio Standard EM-ET	Frame Standard EM-ET
1.1	1	SC1316/ST/EL/AP-1	Carter	Cover
1.2	1	SC1316/ST/EL/AP-2	Staffa a "L"	Clamp "L"
1.3	1	SC1316/ST/EL/AP-3	Telaio	Chassis
1.4	4	PIED70SH	Piedino in gomma	Rubber foot
1.5	1	VITE0825E	VITE T.E. ZINC. 8X25 DIN933	SCREW T.E. ZINC. 8X25 DIN933
1.6	4	RON6Z	RONDELLA PIANA ZINC. M6	WASHER PLANT ZINC. M6
1.7	2	13-00-0137	DADO ZINCATO AUTOBLOC. M6	NUT ZINC. AUTOBLOC. M6 DIN 982
1.8	2	13-00-0041	VITE T.C.E. ZINC. 6x25 DIN912	SCREW T.C.E. ZINC. 6x25 DIN912
1.9	4	VITE0820	VITE T.C.E. ZINC. 8X20	SCREW T.C.E. ZINC. 8X20
1.10	16	RON8	RONDELLA PIANA ZINCATA M8	WASHER PLANT ZINC. M8
1.11	8	13-00-0101	DADO ZINCATO AUTOBLOC. M8	NUT ZINC. AUTOBLOC. M8
1.12	4	VITE0835	VITE T.C.E. ZINC. 8X35	SCREW T.C.E. ZINC. 8X35

TELAIO - FRAME
Mod: Standard EM-ET

KIT 1

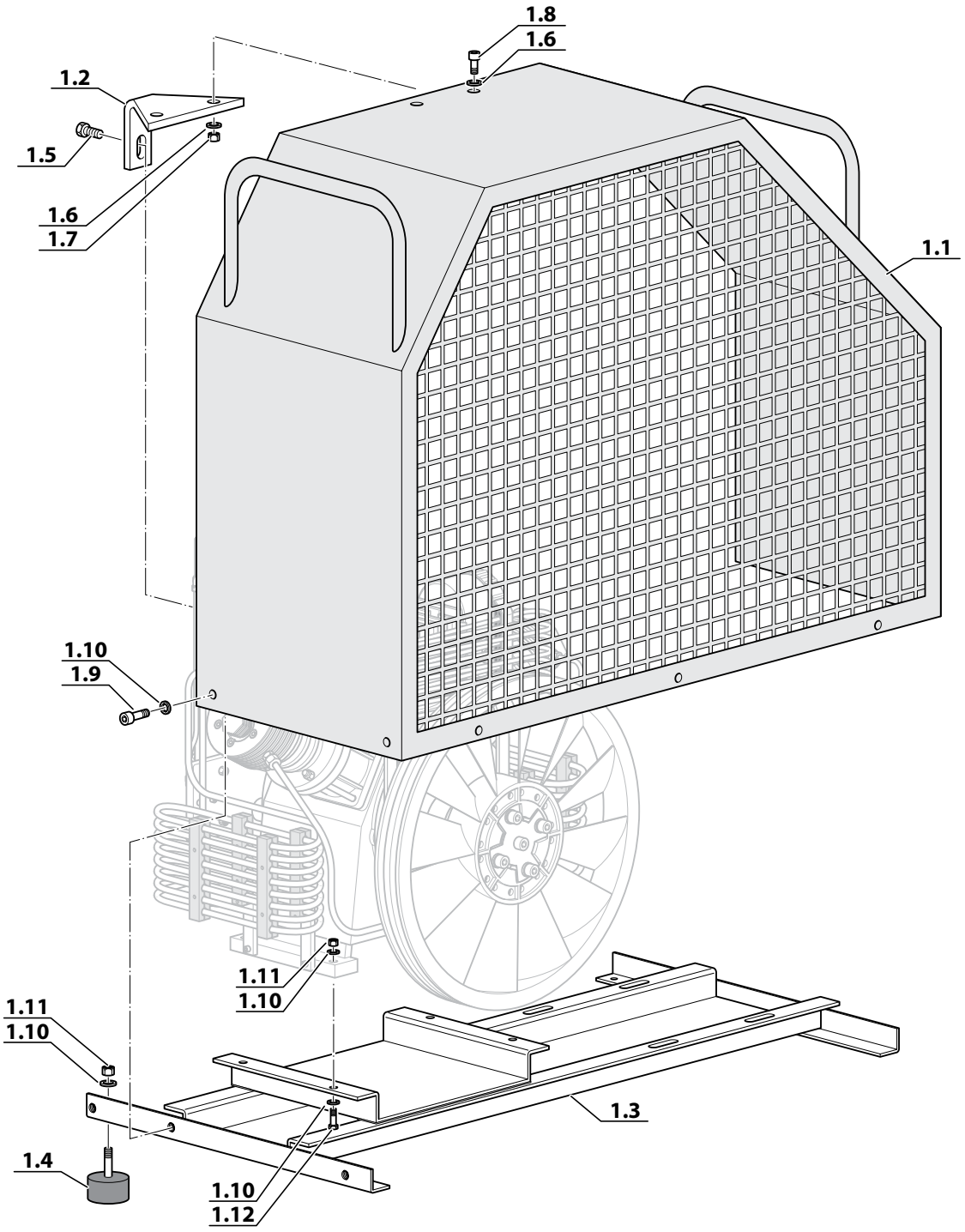

TELAIO - FRAME
Mod: Tech

Rif. Pos.	Q.tà Q.ty	Codice Code	Descrizione	Description
KIT1	1	SC1316/TECH	Telaio Tech SH	Frame Tech SH
1.1	1	SC1316/TECH-1	Telaio	Chassis
1.2	1	SC1316/TECH-2	Carter	Cover
1.3	1	SC1316/TECH-3	Pannello sinistro	Left pannel
1.4	1	SC1316/TECH-4	Pannello destro	Right pannel
1.5	1	SC1316/TECH-5	Pannello anteriore	Front pannel
1.6	1	SC1316/TECH-6	Maniglia	Handle
1.7	4	13-04-0279	Antivibrante	Vibration damper
1.8	4	PIED70SH	Piedino in gomma	Rubber foot
1.9	1	13-05-0200	PORTA TUBO ASPIRAZIONE TECH	SUPPORT SUCTION HOSE REMOTE
1.10	1	13-05-0202	TUBO ASPIRAZIONE A DISTANZA DIA. 30X1000 TECH	SUCTION HOSE REMOTE
1.11	28	VITE0620	VITE T.C.E. ZINC. 6x20 DIN912	SCREW T.C.E. ZINC. 6x20 DIN912
1.12	28	RON6Z	RONDELLA PIANA ZINC. M6	WASHER PLANT ZINC. M6
1.13	2	VITE812/TE	VITE T.E. ZINC. 8X12 DIN933	SCREW T.E. ZINC. 8X12 DIN933
1.14	4	VITE0845	VITE T.C.E. ZINC. 8X45 DIN912	SCREW T.E. ZINC. 8X45 DIN912
1.15	24	RON8	RONDELLA PIANA ZINCATA M8	WASHER PLANT ZINC. M8
1.16	16	13-00-0101	DADO ZINCATO AUTOBLOC. M8	NUT ZINC. AUTOBLOC. M8
1.17	4	VITE0835	VITE T.C.E. ZINC. 8X35	SCREW T.C.E. ZINC. 8X35
1.18	1	13-05-0201	TAPPO TUBO ASP. A DISTANZA TECH	PLUG SUCTION HOSE REMOTE
1.19	1	OR-3118	O RING 3118 NBR70 (29,82X2,62) PER TUBO ASP.TECH	O RING 3118 NBR70 (29,82X2,62)

TELAIO - FRAME
Mod: Tech

KIT 1

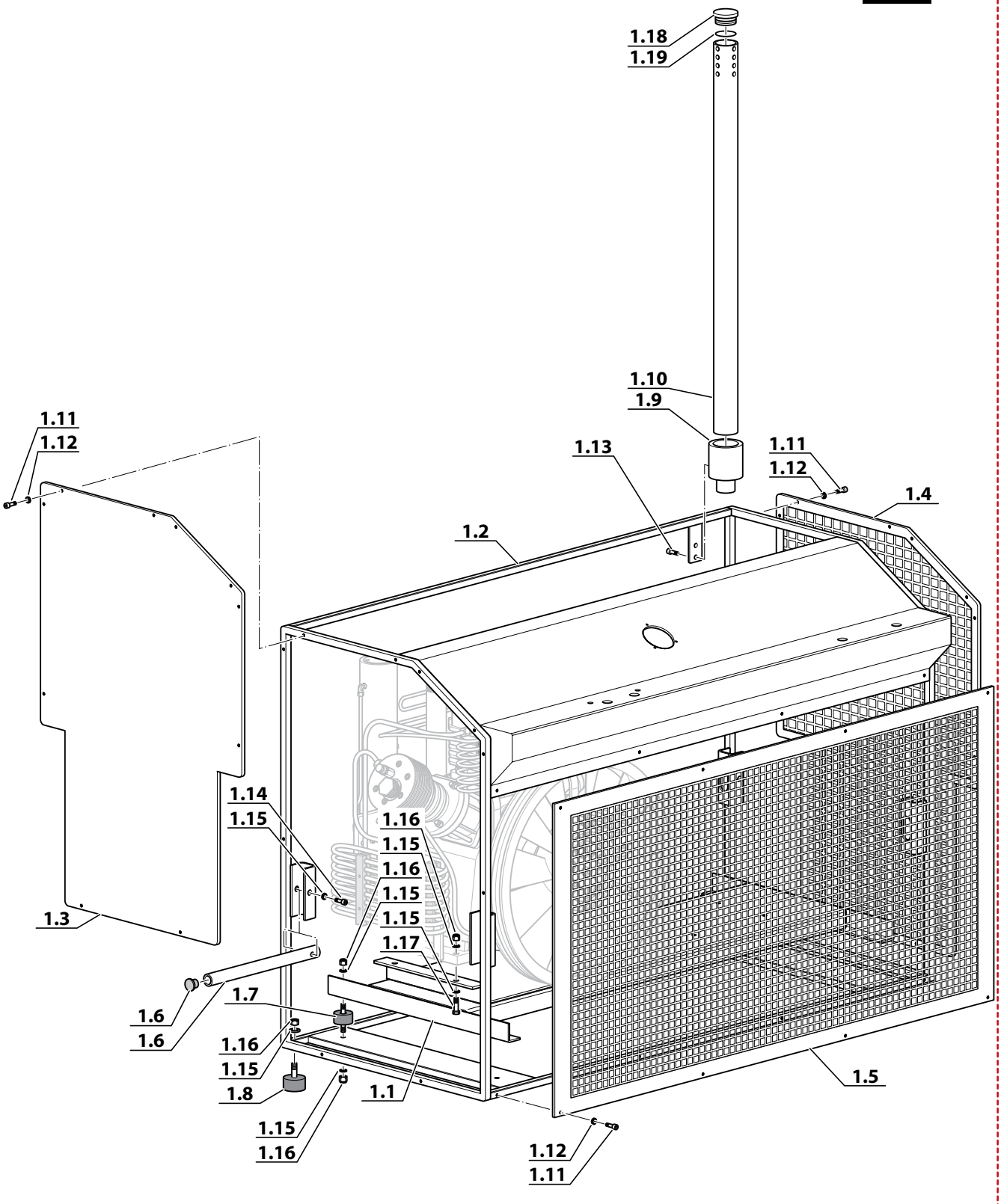

TELAIO - FRAME
Mod: MiniTech SH

Rif. Pos.	Q.tà Q.ty	Codice Code	Descrizione	Description
KIT1	1	SC1316/MINITE/ST/B	Telaio MiniTech SH	Frame MiniTech SH
1.1	1	SC1316/MINITE/ST/B-1	Telaio	Chassis
1.2	1	SC1316/MINITE/ST/B-2	Carter	Cover
1.3	1	SC1316/MINITE/ST/B-3	Pannello anteriore	Front pannel
1.4	1	SC1316/MINITE/ST/B-4	Maniglia	Handle
1.5	4	13-04-0279	Antivibrante	Vibration damper
1.6	4	PIED70SH	Piedino in gomma	Rubber foot
1.7	8	VITE0620	VITE T.C.E. ZINC. 6x20 DIN912	SCREW T.C.E. ZINC. 6x20 DIN912
1.8	8	RON6Z	RONDELLA PIANA ZINC. M6	WASHER PLANT ZINC. M6
1.9	4	VITE0845	VITE T.C.E. ZINC. 8X45 DIN912	SCREW T.E. ZINC. 8X45 DIN912
1.10	24	RON8	RONDELLA PIANA ZINCATA M8	WASHER PLANT ZINC. M8
1.11	16	13-00-0101	DADO ZINCATO AUTOBLOC. M8	NUT ZINC. AUTOBLOC. M8
1.12	4	VITE0835	VITE T.C.E. ZINC. 8X35	SCREW T.C.E. ZINC. 8X35

TELAIO - FRAME
Mod: MiniTech SH

KIT 1

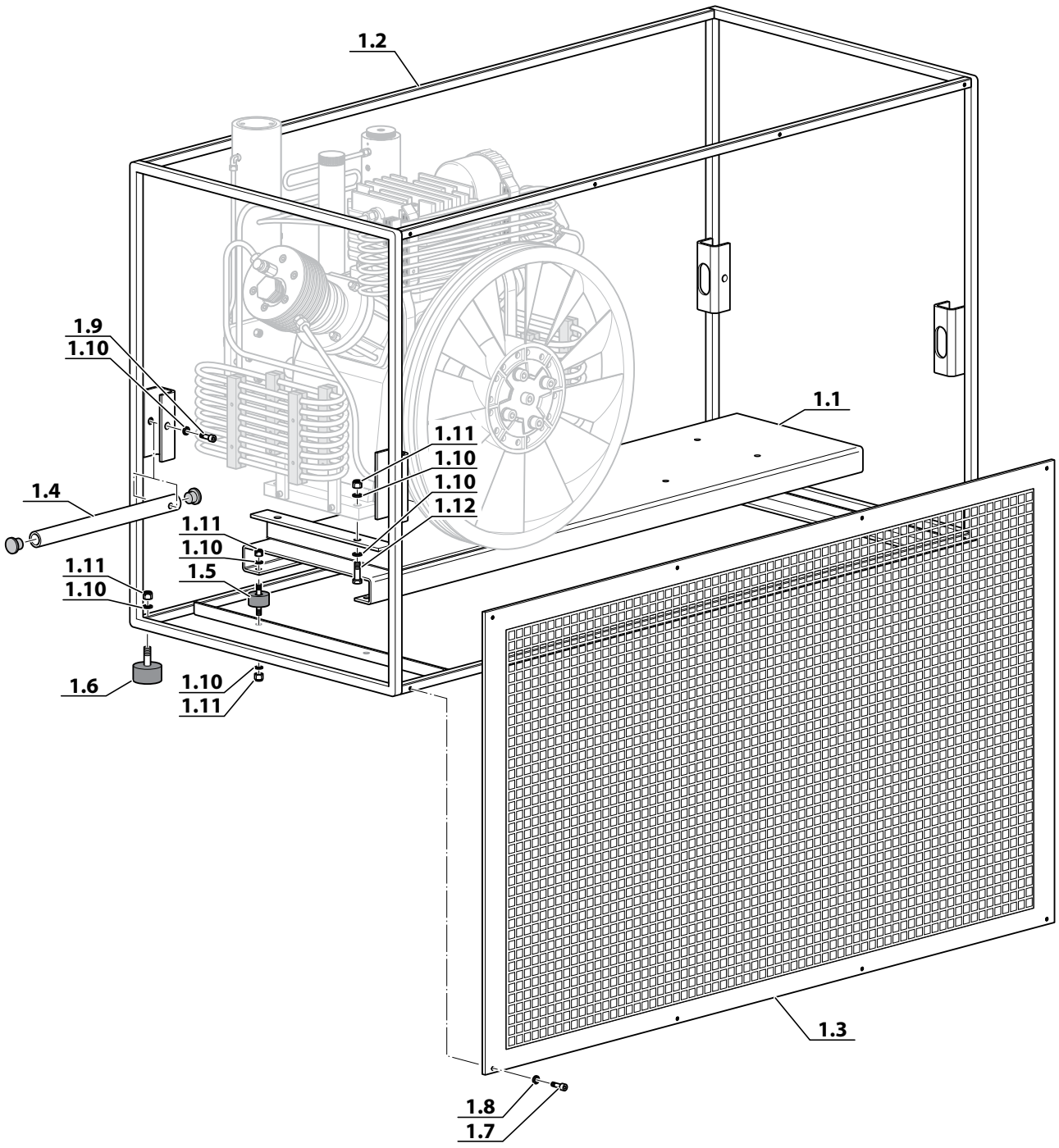

TELAIO - FRAME
Mod: MiniTech DL-DY

Rif. Pos.	Q.tà Q.ty	Codice Code	Descrizione	Description
KIT1	1	SC1316/MINITE/Y	Telaio MiniTech DL-DY	Frame MiniTech DL-DY
1.1	1	SC1316/MINITE/Y-1	Telaio	Chassis
1.2	1	SC1316/MINITE/Y-2	Carter	Cover
1.3	1	SC1316/MINITE/Y-3	Pannello anteriore	Front pannel
1.4	1	SC1316/MINITE/Y-4	Maniglia	Handle
1.5	4	13-04-0279	Antivibrante	Vibration damper
1.6	4	PIED70SH	Piedino in gomma	Rubber foot
1.7	8	VITE0620	VITE T.C.E. ZINC. 6x20 DIN912	SCREW T.C.E. ZINC. 6x20 DIN912
1.8	8	RON6Z	RONDELLA PIANA ZINC. M6	WASHER PLANT ZINC. M6
1.9	4	VITE0845	VITE T.C.E. ZINC. 8X45 DIN912	SCREW T.E. ZINC. 8X45 DIN912
1.10	24	RON8	RONDELLA PIANA ZINCATA M8	WASHER PLANT ZINC. M8
1.11	16	13-00-0101	DADO ZINCATO AUTOBLOC. M8	NUT ZINC. AUTOBLOC. M8
1.12	4	VITE0835	VITE T.C.E. ZINC. 8X35	SCREW T.C.E. ZINC. 8X35

TELAIO - FRAME
Mod: MiniTech DL-DY

KIT 1

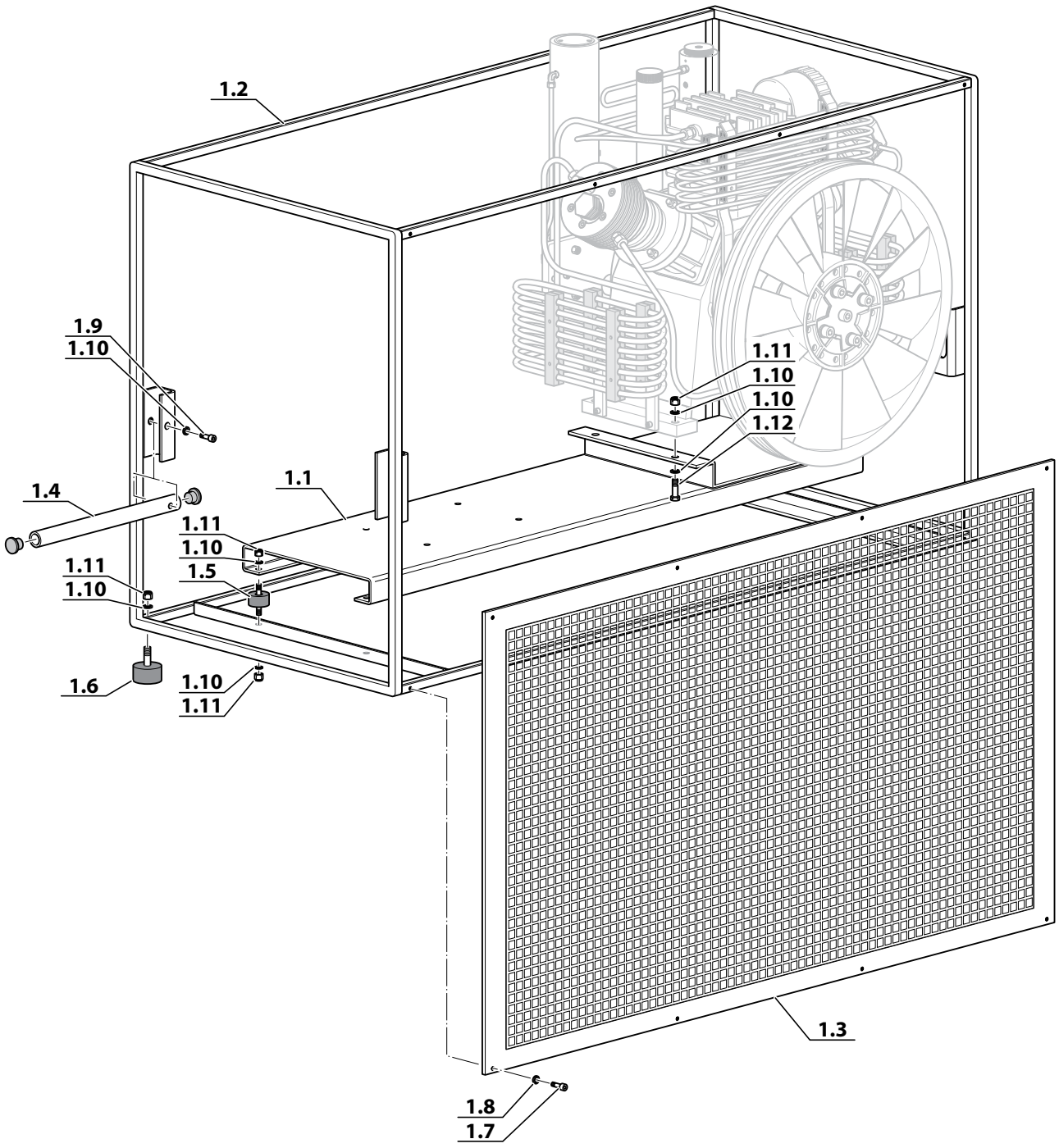

TELAIO - FRAME
Mod: Compact

Rif. Pos.	Q.tà Q.ty	Codice Code	Descrizione	Description
KIT1	1	SC1316/COMP/G	Telaio Compact	Frame Compact
1.1	4	PIED70SH	Piedino in gomma	Rubber foot
1.2	4	13-04-0279	Antivibrante	Vibration damper
1.3	1	SC1316/COMP/G-1	Telaio	Chassis
1.4	1	SC1316/COMP/G-2	Carter	Cover
1.5	1	SC1316/COMP/G-3	Pannello destro	Right pannel
1.6	1	SC1316/COMP/G-4	Pannello sinistro	Left pannel
1.7	1	SC1316/COMP/G-5	Pannello anteriore	Front pannel
1.8	1	SC1316/COMP/G-6	Pannello posteriore	Rear pannel
1.9	1	SC1316/COMP/G-7	Pannello superiore	Upper pannel
1.10	1	SC1316/COMP/G-8	Pannello comando	Control pannel
1.11	1	SC1316/COMP/G-9	Pannello elettrico	Electrical pannel
1.12	1	SC1316/COMP/G-10	Serratura	Lock
1.13	1	SC1316/COMP/G-11	Contaore	Hour counter
1.14	1	SC1316/COMP/G-12	Pulsante scarico condensa	Condensate discharge pushbutton
1.15	1	SC1316/COMP/G-13	Pulsante di accensione	ON pushbutton
1.16	1	SC1316/COMP/G-14	Pulsante di arresto	Stop pushbutton
1.17	1	SC1316/COMP/G-15	Pulsante di emergenza	Emergency pushbutton
1.18	1	AY250/16	PRESSACAVO PG16 IP54 CON GHIERA	CABLE GLAND
1.19	4	SC1316/COMP/G-16	Cerniera nera	HINGE
1.20	16	VITE516I	VITE INOX 5X16 TESTA SVASATATAGLIO CROCE	SCREW
1.21	2	SC1316/COMP/G-17	SERRATURA NERA	LOCK
1.22	17	13-00-0087	VITE T.C.E. ZINC. 6x30 DIN912	SCREW T.C.E. ZINC. 6x30 DIN912
1.23	12	13-00-0101	DADO ZINCATO AUTOBLOC. M8	NUT ZINC. AUTOBLOC. M8
1.24	20	RON8	RONDELLA PIANA ZINCATA M8	WASHER PLANT ZINC. M8
1.25	4	VITE0835	VITE T.C.E. ZINC. 8X35	SCREW T.C.E. ZINC. 8X35

TELAIO - FRAME
Mod: Compact

KIT 1

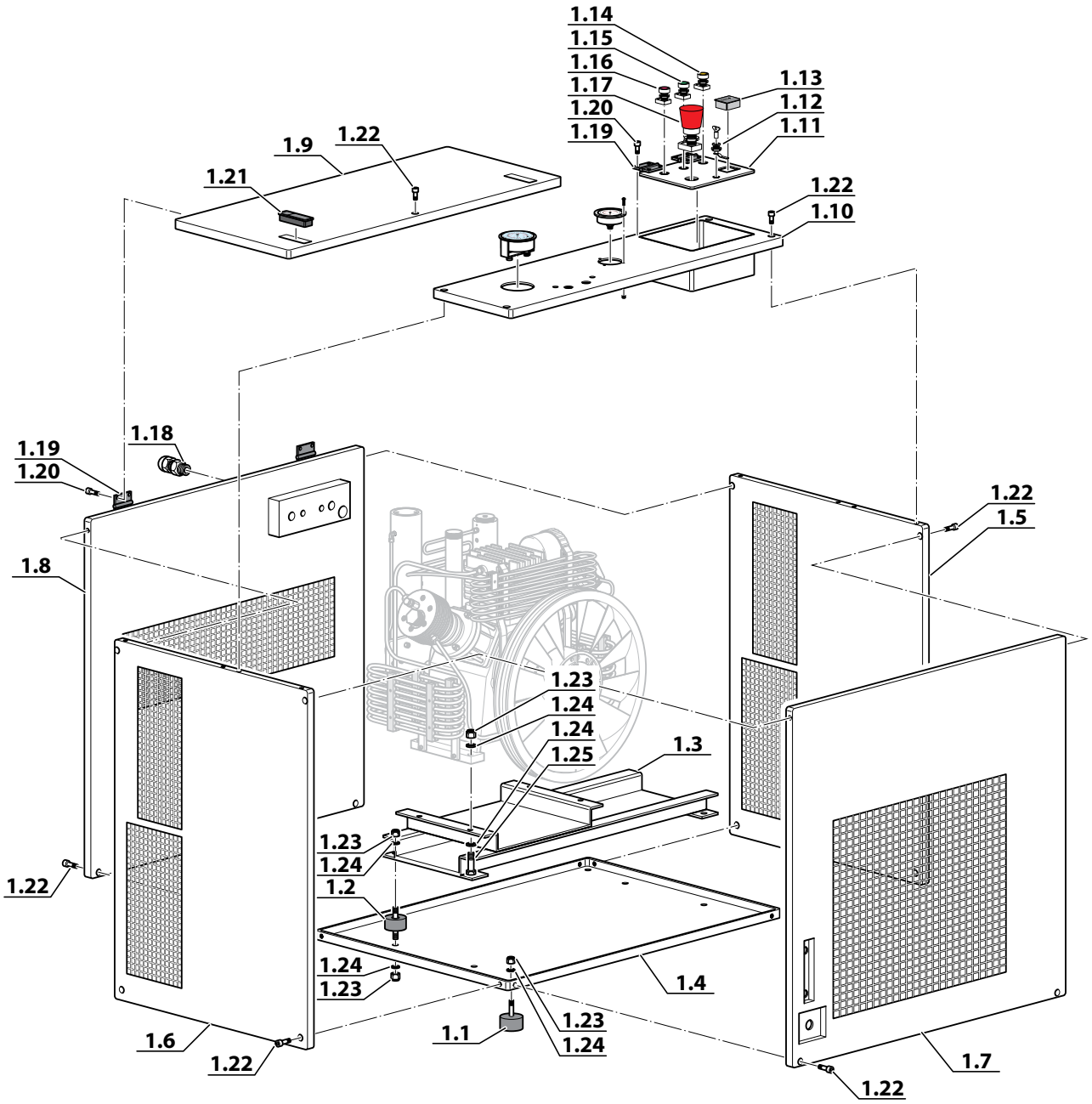

TELAIO - FRAME
Mod: 26-32 Compact

Rif. Pos.	Q.tà Q.ty	Codice Code	Descrizione	Description
KIT1	1	SC2632/COMP/B/G	Telaio 26-32 Compact	Frame 26-32 Compact
1.1	8	13-04-0279	Antivibrante	Vibration damper
1.2	2	SC2632/COMP/B/G-1	Telaio	Chassis
1.3	2	SC2632/COMP/B/G-2	Cofano	Hood
1.4	1	SC2632/COMP/B/G-3	Carter	Cover
1.5	1	SC2632/COMP/B/G-4	Pannello interno	Internal panel
1.6	8	SC2632/COMP/B/G-5	Cerniera sportello	Door hinge
1.7	1	SC2632/COMP/B/G-6	Pannello destro	Right pannel
1.8	1	SC2632/COMP/B/G-7	Pannello sinistro	Left pannel
1.9	1	SC2632/COMP/B/G-8	Pannello anteriore	Front pannel
1.10	1	SC2632/COMP/B/G-9	Pannello posteriore	Rear pannel
1.11	1	SC2632/COMP/B/G-10	Pannello superiore	Upper pannel
1.12	2	SC2632/COMP/B/G-11	Pannello elettrico	Electrical pannel
1.13	1	SC2632/COMP/B/G-12	Pulsante di emergenza	Emergency pushbutton
1.14	2	SC2632/COMP/B/G-13	Contaore	Hour counter
1.15	2	SC2632/COMP/B/G-14	Pulsante scarico condensa	Condensate discharge pushbutton
1.16	2	SC2632/COMP/B/G-15	Pulsante di accensione	ON pushbutton
1.17	2	SC2632/COMP/B/G-16	Serratura	Lock
1.18	1	AY250/16	PRESSACAVO PG16 IP54 CON GHIERA	CABLE GLAND
1.19	32	VITE516I	VITE INOX 5X16 TESTA SVASATATAGLIO CROCE	SCREW
1.20	4	00-00-0000	BARRA FILETTATA M6 L=180cm	BAR THREADED
1.21	4	DA006CI	DADO INOX CIECO M6 UNI 1587	NUT
1.22	52	RON6Z	RONDELLA PIANA ZINC. M6	WASHER PLANT ZINC. M6
1.23	24	13-00-0137	DADO ZINCATO AUTOBLOC. M6	NUT ZINC. AUTOBLOC. M6 DIN 982
1.24	24	13-00-0041	VITE T.C.E. ZINC. 6x25 DIN912	SCREW T.C.E. ZINC. 6x25 DIN912
1.25	32	RON8	RONDELLA PIANA ZINCATA M8	WASHER PLANT ZINC. M8
1.26	24	13-00-0101	DADO ZINCATO AUTOBLOC. M8	NUT ZINC. AUTOBLOC. M8
1.27	8	VITE0835	VITE T.C.E. ZINC. 8X35	SCREW T.C.E. ZINC. 8X35
1.28	14	13-00-0087	VITE T.C.E. ZINC. 6x30 DIN912	SCREW T.C.E. ZINC. 6x30 DIN912

TELAIO - FRAME
Mod: 26-32 Compact

KIT 1

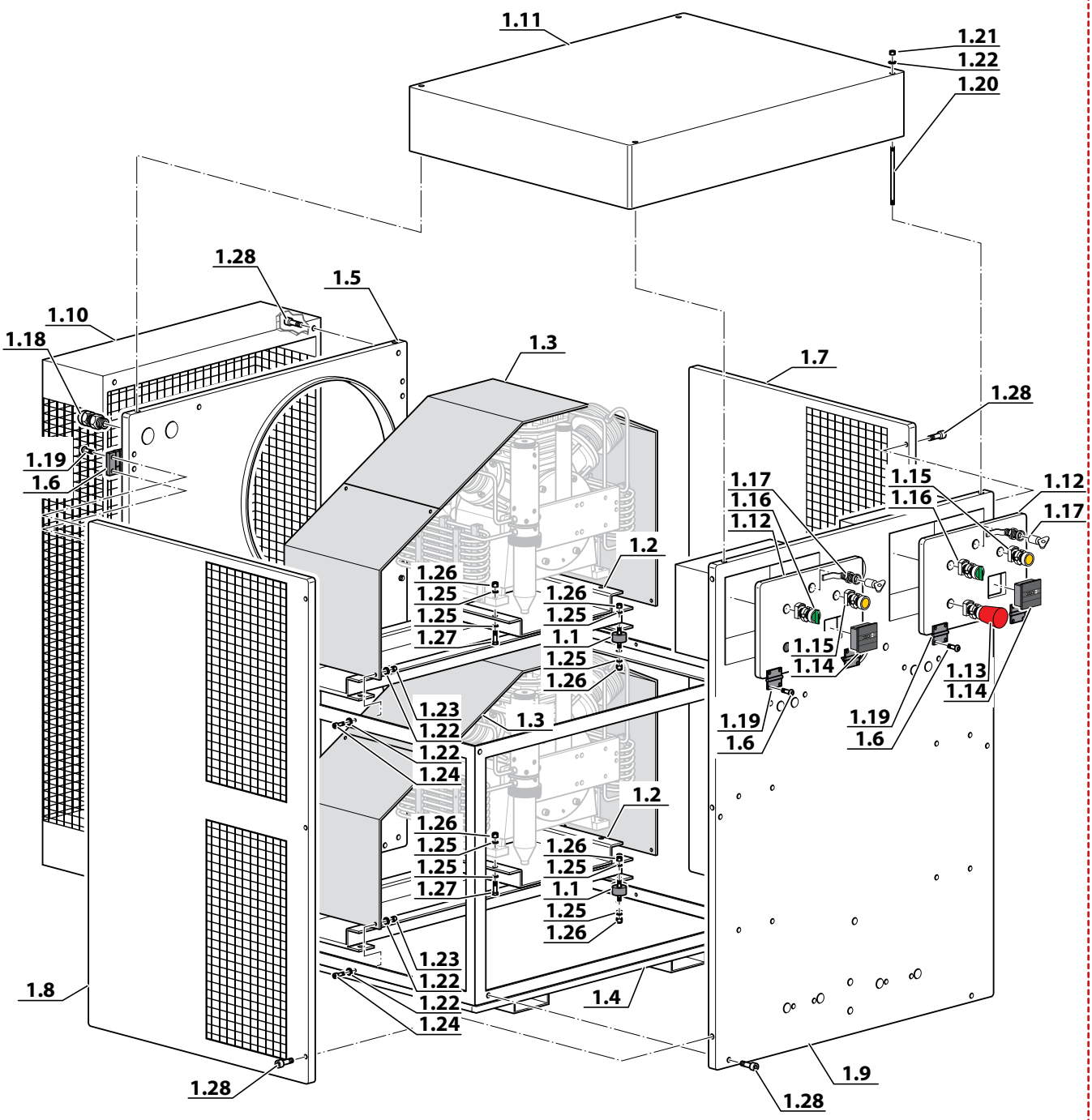

TELAIO - FRAME
Mod: Compact Evo

Rif. Pos.	Q.tà Q.ty	Codice Code	Descrizione	Description
KIT1	1	SC1316/COMP/EV/G	Telaio Compact Evo	Frame Compact Evo
1.1	4	PIED70SH	Piedino in gomma	Rubber foot
1.2	4	13-04-0279	Antivibrante	Vibration damper
1.3	1	SC1316/COMP/EV/G-1	Telaio	Chassis
1.4	1	SC1316/COMP/EV/G-2	Carter	Cover
1.5	1	SC1316/COMP/EV/G-3	Pannello sinistro	Left pannel
1.6	1	SC1316/COMP/EV/G-4	Pannello destro	Right pannel
1.7	1	SC1316/COMP/EV/G-5	Pannello anteriore	Front pannel
1.8	1	SC1316/COMP/EV/G-6	Pannello posteriore	Rear pannel
1.9	1	SC1316/COMP/EV/G-7	Pannello superiore	Upper pannel
1.10	1	SC1316/COMP/EV/G-8	Pannello comando	Control pannel
1.11	1	SC1316/COMP/EV/G-9	Pannello elettrico	Electrical pannel
1.12	1	SC1316/COMP/EV/G-10	Serratura	Lock
1.13	1	SC1316/COMP/EV/G-11	Contaore	Hour counter
1.14	1	SC1316/COMP/EV/G-12	Display temperatura	Temperature display
1.15	1	SC1316/COMP/EV/G-13	Pulsante di emergenza	Emergency pushbutton
1.16	1	SC1316/COMP/EV/G-14	LED senso di rotazione (rosso)	Direction of rotation LED (red)
1.17	1	SC1316/COMP/EV/G-15	LED livello olio (rosso)	Oil level LED (red)
1.18	1	SC1316/COMP/EV/G-16	Pulsante scarico condensa	Condensate discharge pushbutton
1.19	1	SC1316/COMP/EV/G-17	Pulsante di accensione	ON pushbutton
1.20	1	SC1316/COMP/EV/G-18	Pulsante di arresto	Stop pushbutton
1.21	1	AY250/16	PRESSACAVO PG16 IP54 CON GHIERA	CABLE GLAND
1.22	17	13-00-0087	VITE T.C.E. ZINC. 6x30 DIN912	SCREW T.C.E. ZINC. 6x30 DIN912
1.23	2	SC1316/COMP/EV/G-19	SERRATURA NERA	LOCK
1.24	4	SC1316/COMP/EV/G-20	Cerniera nera	HINGE
1.25	16	VITE516I	VITE INOX 5X16 TESTA SVASATATAGLIO CROCE	SCREW
1.26	20	RON8	RONDELLA PIANA ZINCATA M8	WASHER PLANT ZINC. M8
1.27	16	13-00-0101	DADO ZINCATO AUTOBLOC. M8	NUT ZINC. AUTOBLOC. M8
1.28	4	VITE0835	VITE T.C.E. ZINC. 8X35	SCREW T.C.E. ZINC. 8X35

TELAIO - FRAME
Mod: Compact Evo

KIT 1

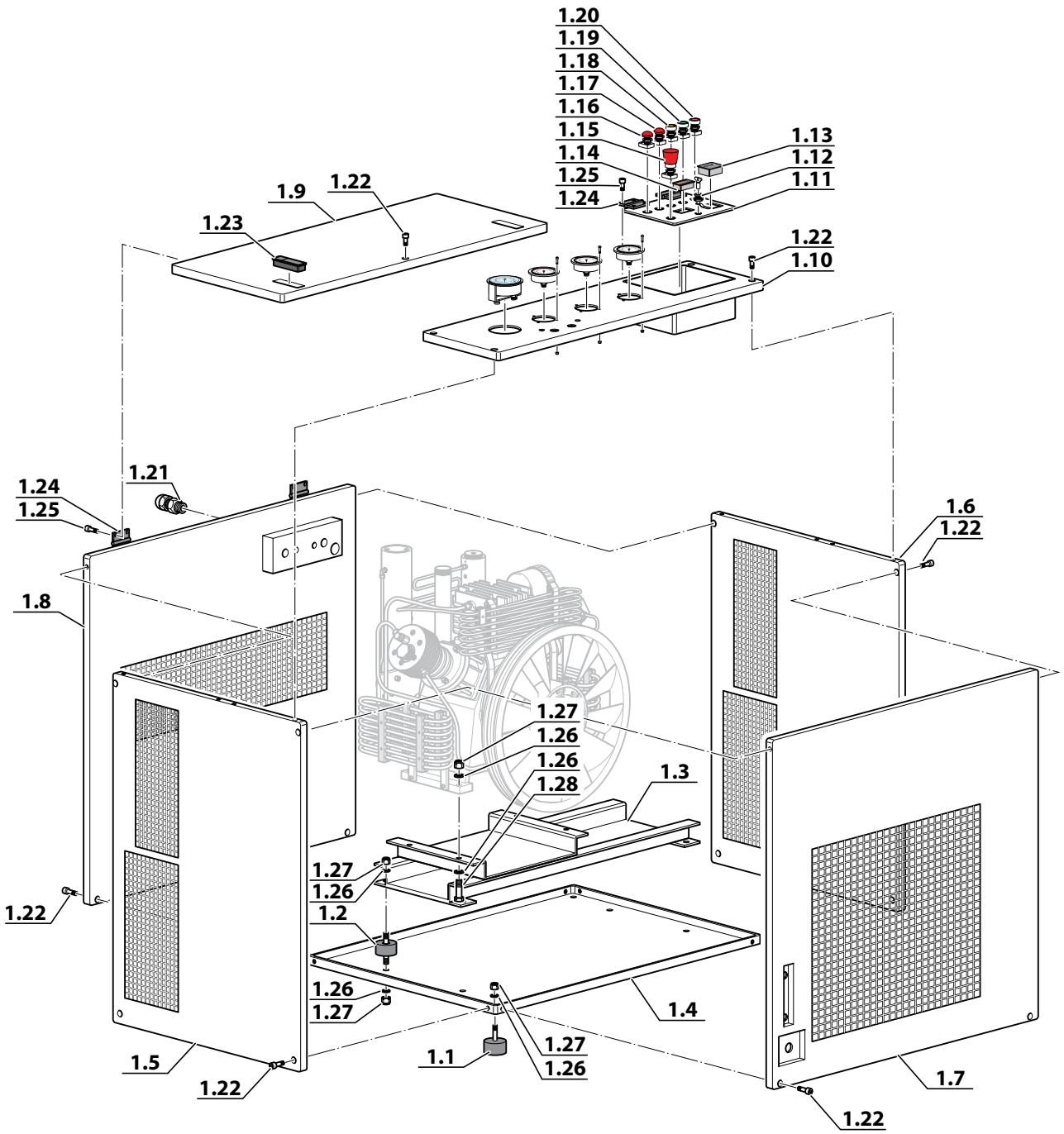

TELAIO - FRAME
Mod: Compact M

Rif. Pos.	Q.tà Q.ty	Codice Code	Descrizione	Description
KIT1	1	SC1316/COMP/M/G	Telaio Compact M	Frame Compact M
1.1	4	PIED70SH	Piedino in gomma	Rubber foot
1.2	4	13-04-0279	Antivibrante	Vibration damper
1.3	1	SC1316/COMP/M/G-1	Telaio	Chassis
1.4	1	SC1316/COMP/M/G-2	Carter	Cover
1.5	1	SC1316/COMP/M/G-3	Pannello sinistro	Left pannel
1.6	1	SC1316/COMP/M/G-4	Pannello destro	Right pannel
1.7	1	SC1316/COMP/M/G-5	Pannello anteriore	Front pannel
1.8	1	SC1316/COMP/M/G-6	Pannello posteriore	Rear pannel
1.9	1	SC1316/COMP/M/G-7	Pannello superiore	Upper pannel
1.10	1	SC1316/COMP/M/G-8	Pannello comando	Control pannel
1.11	1	SC1316/COMP/M/G-9	Pannello elettrico	Electrical pannel
1.12	16	13-00-0101	DADO ZINCATO AUTOBLOC. M8	NUT ZINC. AUTOBLOC. M8
1.13	4	VITE0835	VITE T.C.E. ZINC. 8X35	SCREW T.C.E. ZINC. 8X35
1.14	1	SC1316/COMP/M/G-10	Pulsante di accensione	ON pushbutton
1.15	1	SC1316/COMP/M/G-11	Pulsante di arresto	Stop pushbutton
1.16	1	SC1316/COMP/M/G-12	Pulsante scarico condensa	Condensate discharge pushbutton
1.17	1	SC1316/COMP/M/G-13	LED senso di rotazione (rosso)	Direction of rotation LED (red)
1.18	1	SC1316/COMP/M/G-14	LED livello olio (rosso)	Oil level LED (red)
1.19	1	SC1316/COMP/M/G-15	Pulsante di emergenza	Emergency pushbutton
1.20	1	SC1316/COMP/M/G-16	Contaore	Hour counter
1.21	1	AY250/16	PRESSACAVO PG16 IP54 CON GHIERA	CABLE GLAND
1.22	17	13-00-0087	VITE T.C.E. ZINC. 6x30 DIN912	SCREW T.C.E. ZINC. 6x30 DIN912
1.23	2	SC1316/COMP/M/G-17	SERRATURA NERA	LOCK
1.24	4	SC1316/COMP/M/G-18	Cerniera nera	HINGE
1.25	16	VITE516I	VITE INOX 5X16 TESTA SVASATATAGLIO CROCE	SCREW
1.26	20	RON8	RONDELLA PIANA ZINCATA M8	WASHER PLANT ZINC. M8

TELAIO - FRAME
Mod: Compact M

KIT 1

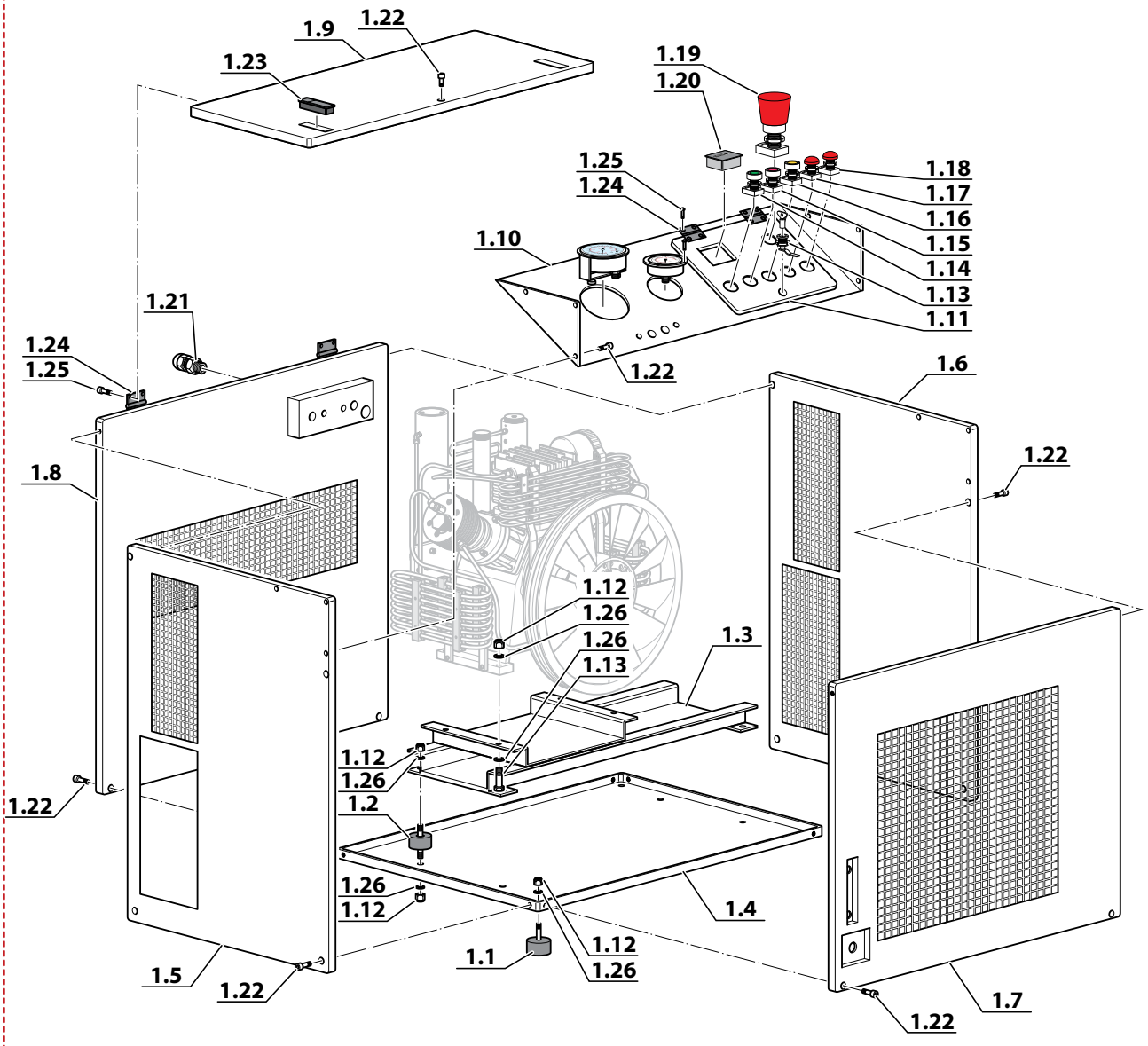

TELAIO - FRAME
Mod: SuperSilent Evo

Rif. Pos.	Q.tà Q.ty	Codice Code	Descrizione	Description
KIT1	1	SC1316/SS/EVO/G	Telaio SuperSilent Evo	Frame SuperSilent Evo
1.1	4	13-04-0279	Antivibrante	Vibration damper
1.2	1	SC1316/SS/EVO/G-1	Telaio	Chassis
1.3	1	SC1316/SS/EVO/G-2	Carter	Cover
1.4	1	SC1316/SS/EVO/G-3	Pannello sinistro inferiore	Left lower pannel
1.5	1	SC1316/SS/EVO/G-4	Pannello sinistro superiore	Left upper pannel
1.6	1	SC1316/SS/EVO/G-5	Pannello destro inferiore	Right lower pannel
1.7	1	SC1316/SS/EVO/G-6	Pannello destro superiore	Right upper pannel
1.8	1	SC1316/SS/EVO/G-7	Pannello anteriore	Front pannel
1.9	1	SC1316/SS/EVO/G-8	Pannello interno	Internal panel
1.10	1	SC1316/SS/EVO/G-9	Pannello posteriore	Rear pannel
1.11	1	SC1316/SS/EVO/G-10	Supporto tanica	Tank support
1.12	1	SC1316/SS/EVO/G-11	Pannello superiore	Upper pannel
1.13	1	SC1316/SS/EVO/G-12	Pannello elettrico	Electrical pannel
1.14	1	SC1316/SS/EVO/G-13	Serratura	Lock
1.15	1	SC1316/SS/EVO/G-14	Pulsante di accensione	ON pushbutton
1.16	1	SC1316/SS/EVO/G-15	Pulsante di arresto	Stop pushbutton
1.17	1	SC1316/SS/EVO/G-16	Pulsante scarico condensa	Condensate discharge pushbutton
1.18	1	SC1316/SS/EVO/G-17	LED senso di rotazione (rosso)	Direction of rotation LED (red)
1.19	1	SC1316/SS/EVO/G-18	LED livello olio (rosso)	Oil level LED (red)
1.20	1	SC1316/SS/EVO/G-19	Pulsante di emergenza	Emergency pushbutton
1.21	1	SC1316/SS/EVO/G-20	Display temperatura	Temperature display
1.22	1	SC1316/SS/EVO/G-21	Contaore	Hour counter
1.23	2	AY250/16	PRESSACAVO PG16 IP54 CON GHIERA	CABLE GLAND
1.24	8	VITE516I	VITE INOX 5X16 TESTA SVASATATAGLIO CROCE	SCREW
1.25	2	SC1316/SS/EVO/G-22	Cerniera nera	HINGE
1.26	2	SC1316/SS/EVO/G-23	Serratura nera	Black Lock
1.27	1	SC1316/SS/EVO/G-24	Pannello superiore interno	Internal Upper pannel
1.28	4	16-05-030	PIEDINO SIGLA 'P' 50X30 M10	Rubber foot
1.29	2	13-00-0041	VITE T.C.E. ZINC. 6x25 DIN912	SCREW T.C.E. ZINC. 6x25 DIN912
1.30	2	RON6Z	RONDELLA PIANA ZINC. M6	WASHER PLANT ZINC. M6
1.31	18	13-00-0087	VITE T.C.E. ZINC. 6x30 DIN912	SCREW T.C.E. ZINC. 6x30 DIN912
1.32	12	13-00-0101	DADO ZINCATO AUTOBLOC. M8	NUT ZINC. AUTOBLOC. M8
1.33	16	RON8	RONDELLA PIANA ZINCATA M8	WASHER PLANT ZINC. M8
1.34	4	VITE0835	VITE T.C.E. ZINC. 8X35	SCREW T.C.E. ZINC. 8X35

TELAIO - FRAME
Mod: SuperSilent Evo

KIT 1

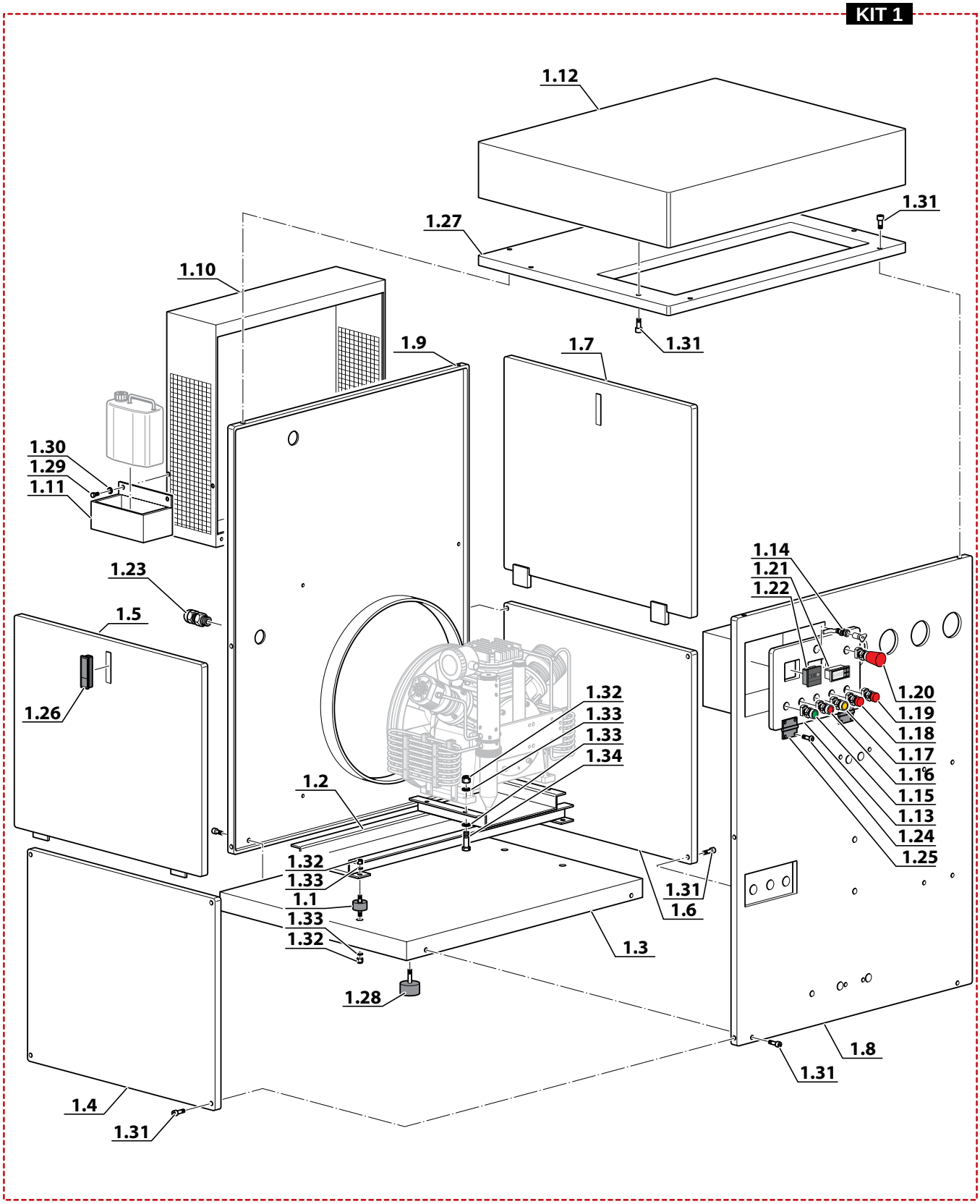

TELAIO - FRAME
Mod: MiniSilent

Rif. Pos.	Q.tà Q.ty	Codice Code	Descrizione	Description
KIT1	1	SC1316/MINISIL	Telaio MiniSilent	Frame MiniSilent
1.1	4	13-04-0279	Antivibrante	Vibration damper
1.2	1	SC1316/MINISIL-1	Telaio	Chassis
1.3	1	SC1316/MINISIL-2	Carter	Cover
1.4	4	16-05-030	PIEDINO SIGLA 'P' 50X30 M10	Rubber foot
1.5	1	SC1316/MINISIL-3	Pannello sinistro inferiore	Left lower pannel
1.6	1	SC1316/MINISIL-4	Pannello sinistro superiore	Left upper pannel
1.7	1	SC1316/MINISIL-5	Pannello destro inferiore	Right lower pannel
1.8	1	SC1316/MINISIL-6	Pannello destro superiore	Right upper pannel
1.9	3	SC1316/MINISIL-7	Serratura	Lock
1.10	1	SC1316/MINISIL-8	Pannello anteriore	Front pannel
1.11	1	SC1316/MINISIL-9	Pannello interno	Internal panel
1.12	1	SC1316/MINISIL-10	Pannello posteriore	Rear pannel
1.13	1	SC1316/MINISIL-11	Pannello interno superiore	Upper internal pannel
1.14	3	SC1316/MINISIL-12	Pannello superiore	Upper pannel
1.15	2	SC1316/MINISIL-13	Cerniera sportello	Door hinge
1.16	1	SC1316/MINISIL-14	Pulsante di accensione	ON pushbutton
1.17	1	SC1316/MINISIL-15	Pulsante di arresto	Stop pushbutton
1.18	1	SC1316/MINISIL-16	Pulsante scarico condensa	Condensate discharge pushbutton
1.19	1	SC1316/MINISIL-17	Contaore	Hour counter
1.20	1	SC1316/MINISIL-18	Pulsante di emergenza	Emergency pushbutton
1.21	2	AY250/16	PRESSACAVO PG16 IP54 CON GHIERA	CABLE GLAND
1.22	1	SC1316/MINISIL-19	Pannello elettrico	Electrical panel
1.23	12	VITE516I	VITE INOX 5X16 TESTA SVASATATAGLIO CROCE	SCREW
1.24	20	13-00-0087	VITE T.C.E. ZINC. 6x30 DIN912	SCREW T.C.E. ZINC. 6x30 DIN912
1.25	12	13-00-0101	DADO ZINCATO AUTOBLOC. M8	NUT ZINC. AUTOBLOC. M8
1.26	16	RON8	RONDELLA PIANA ZINCATA M8	WASHER PLANT ZINC. M8
1.27	4	VITE0835	VITE T.C.E. ZINC. 8X35	SCREW T.C.E. ZINC. 8X35

TELAIO - FRAME
Mod: MiniSilent

KIT 1

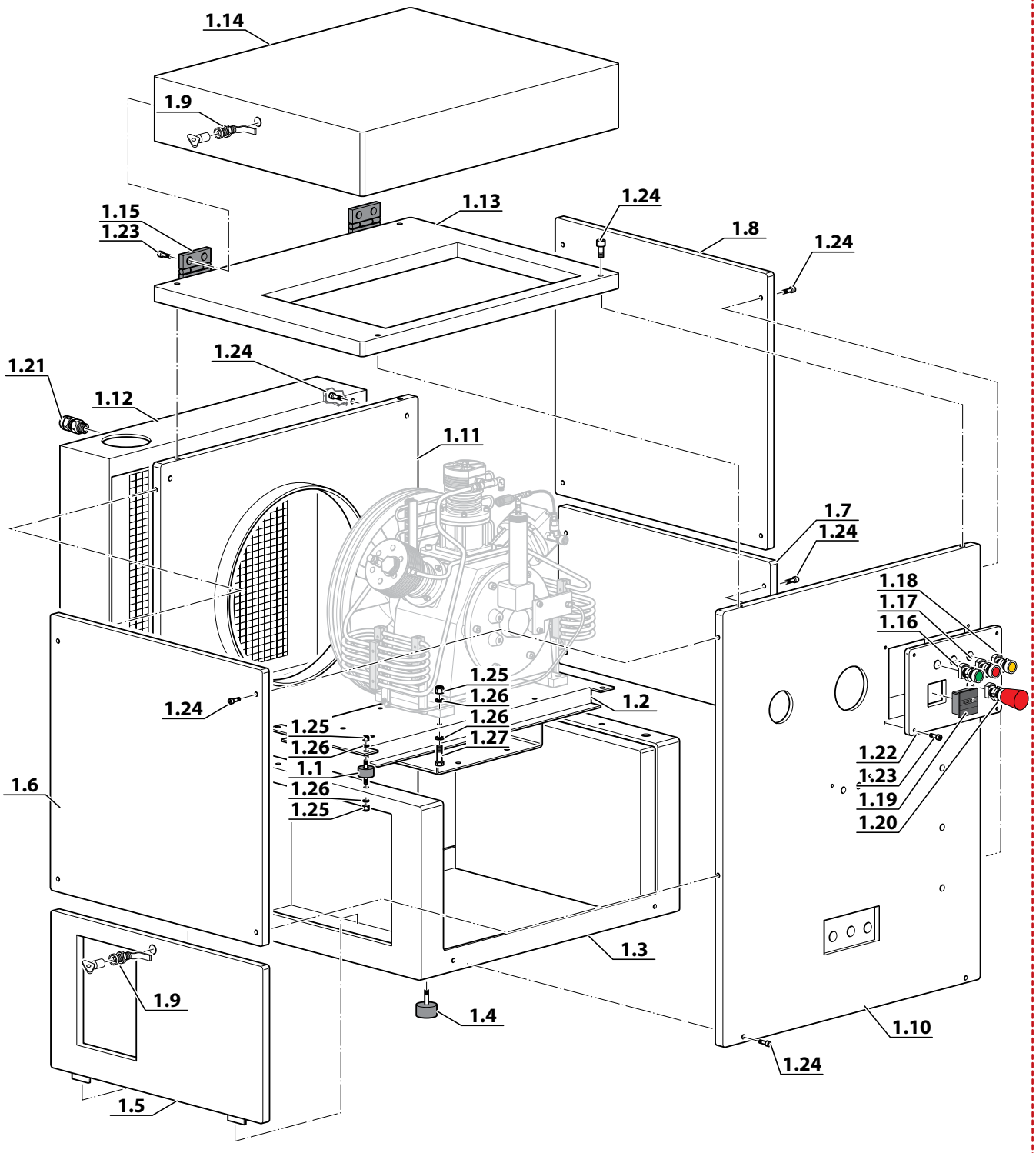

TELAIO - FRAME
Mod: Mark1 - Mark2

Rif. Pos.	Q.tà Q.ty	Codice Code	Descrizione	Description
KIT1	1	SC1316/MARK1-2G	Telaio Mark1-2	Frame Mark1-2
1.1	4	PIED70SH	Piedino in gomma	Rubber foot
1.2	4	13-04-0279	Antivibrante	Vibration damper
1.3	1	SC1316/MARK1-2G-1	Telaio	Chassis
1.4	1	SC1316/MARK1-2G-2	Carter	Cover
1.5	1	SC1316/MARK1-2G-3	Pannello sinistro	Left pannel
1.6	1	SC1316/MARK1-2G-4	Pannello destro	Right pannel
1.7	1	SC1316/MARK1-2G-5	Pannello anteriore	Front pannel
1.8	1	SC1316/MARK1-2G-6	Pannello posteriore	Rear pannel
1.9	1	SC1316/MARK1-2G-7	Pannello superiore	Upper pannel
1.10	1	SC1316/MARK1-2G-8	Pannello comando	Control pannel
1.11	1	SC1316/MARK1-2G-9	Pannello elettrico	Electrical pannel
1.12	1	SC1316/MARK1-2G-10	Supporto tanica	Tank support
1.13	4	SC1316/MARK1-2G-11	Cerniera sportello	Door hinge
1.14	1	SC1316/MARK1-2G-12	Pulsante di accensione	ON pushbutton
1.15	1	SC1316/MARK1-2G-13	Pulsante di arresto	Stop pushbutton
1.16	1	SC1316/MARK1-2G-14	Pulsante scarico condensa	Condensate discharge pushbutton
1.17	1	SC1316/MARK1-2G-15	LED senso di rotazione (rosso)	Direction of rotation LED (red)
1.18	1	SC1316/MARK1-2G-16	LED livello olio (rosso)	Oil level LED (red)
1.19	1	SC1316/MARK1-2G-17	Pulsante di emergenza	Emergency pushbutton
1.20	1	SC1316/MARK1-2G-18	Display temperatura	Temperature display
1.21	1	SC1316/MARK1-2G-19	Contaore	Hour counter
1.22	1	SC1316/MARK1-2G-20	Serratura	Lock
1.23	2	AY250/16	PRESSACAVO PG16 IP54 CON GHIERA	CABLE GLAND
1.24	1	SC1316/MARK1-2G-21	Scatola elettrica	Electrical box
1.25	20	VITE516I	VITE INOX 5X16 TESTA SVASATATAGLIO CROCE	SCREW
1.26	1	SC1316/MARK1-2G-22	SERRATURA NERA	LOCK
1.27	16	13-00-0087	VITE T.C.E. ZINC. 6x30 DIN912	SCREW T.C.E. ZINC. 6x30 DIN912
1.28	2	VITE0620	VITE T.C.E. ZINC. 6x20 DIN912	SCREW T.C.E. ZINC. 6x20 DIN912
1.29	2	RON6Z	RONDELLA PIANA ZINC. M6	WASHER PLANT ZINC. M6
1.30	16	13-00-0101	DADO ZINCATO AUTOBLOC. M8	NUT ZINC. AUTOBLOC. M8
1.31	20	RON8	RONDELLA PIANA ZINCATA M8	WASHER PLANT ZINC. M8
1.32	4	VITE0835	VITE T.C.E. ZINC. 8X35	SCREW T.C.E. ZINC. 8X35

TELAIO - FRAME

Mod: Mark1 - Mark2

KIT 1

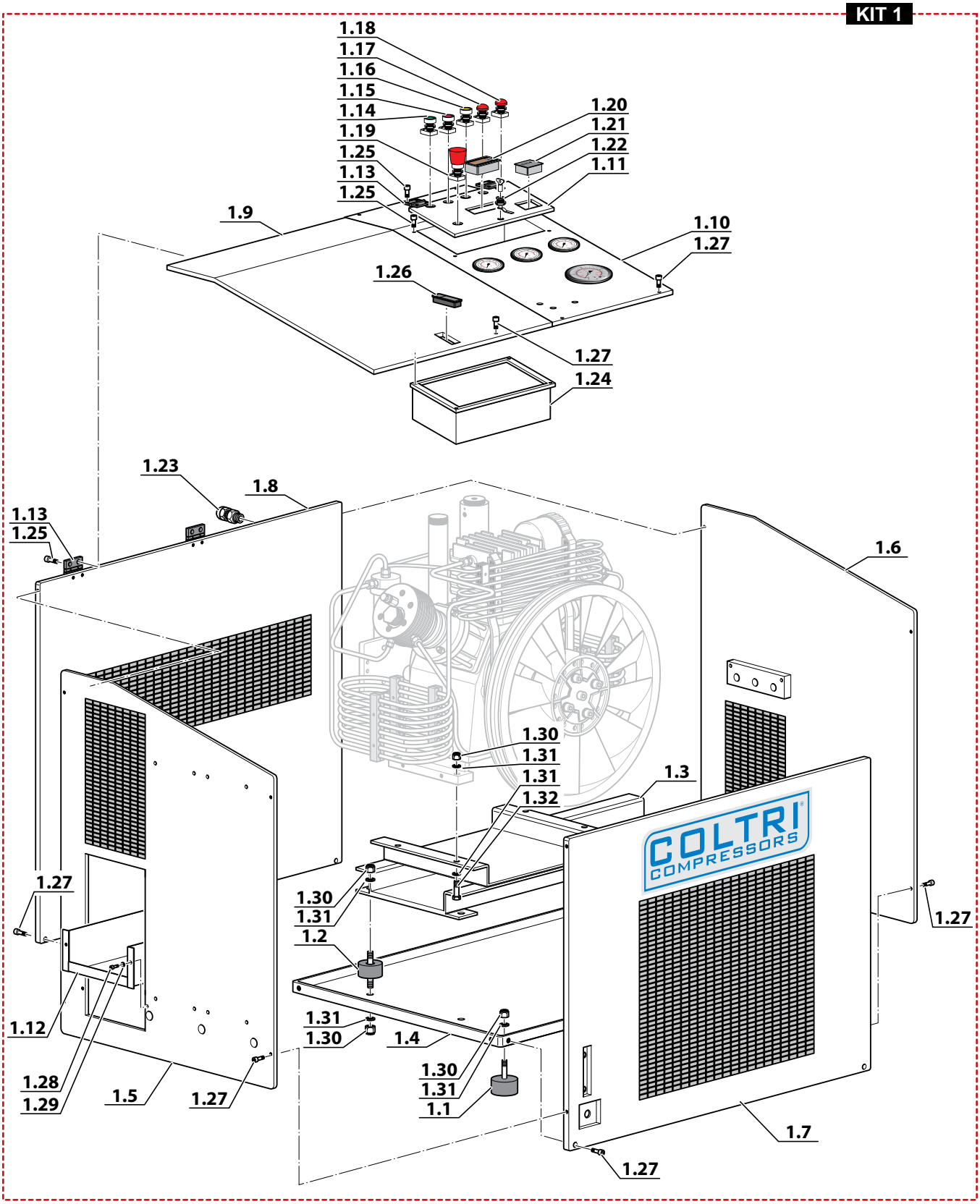

TARGHETTE DI SICUREZZA - SAFETY INFO LABEL

Rif. Pos.	Q.tà Q.ty	Codice Code	Descrizione	Description
139	1	ADES/SER/MCH6	Adesivo istruzioni MCH6	Instructions Sticker
140	1	ADES/NORME/SIC1	Adesivo norme sicurezza singolo	Safety Information Sticker - Single

TARGHETTE DI SICUREZZA - SAFETY INFO LABEL

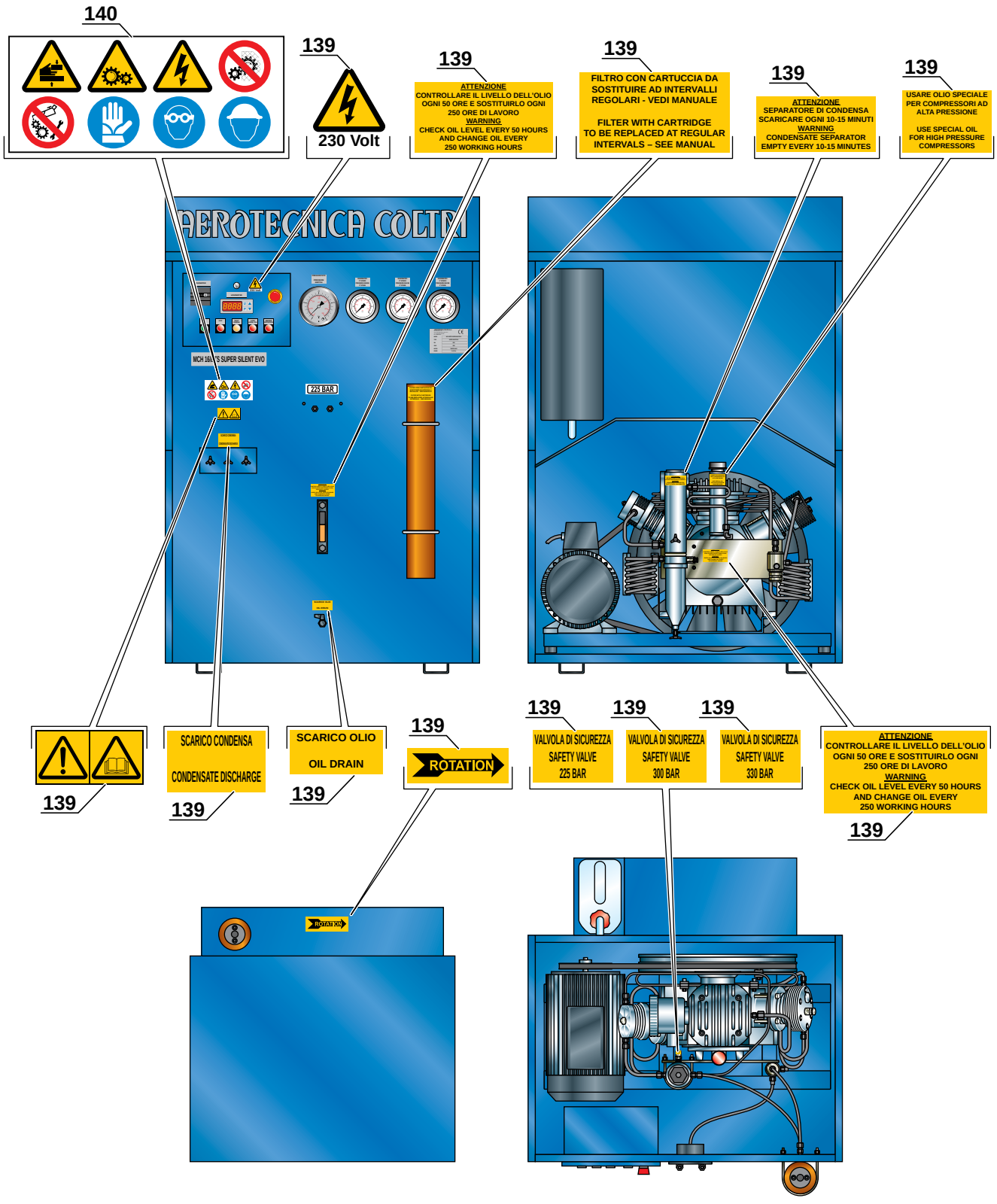

Tavola	Drawing	Pag.
Puleggia motore/Cinghia di trasmission	Engine pulley/Transmission belt	108

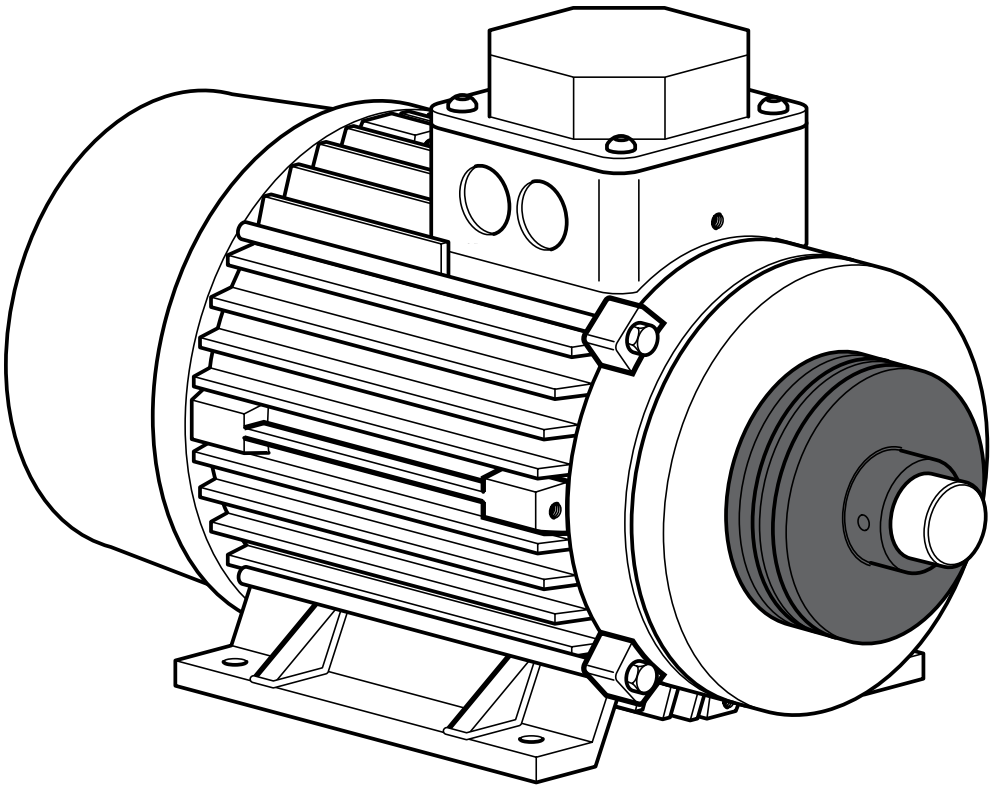

PULEGGIA MOTORE/CINGHIA DI TRASMISSIONE
ENGINE PULLEY/TRANSMISSION BELT

	Compressore Compressor	Motore Powered by	Cinghia (A) Belt (A)		Ø Puleggia Ø Pulley	Puleggia (B) Pulley (B)	
MOTORI BENZINA - DIESEL / BENZIN-DIESEL ENGINE	MCH13/SH Standard	Honda Benzin GX270	CINGA76		Ø 170	PUL/HOND/R	
	MCH16/SH Standard	Honda Benzin GX270	CINGA76		Ø 170	PUL/HOND/R	
	MCH13/DL Standard	Lombardini Diesel D350	CINGA76		Ø 170	PUL/LOMB/R	
	MCH16/DL Standard	Lombardini Diesel D400	CINGA76		Ø 170	PUL/LOMB/R	
	MCH13/DY Standard	Yanmar Diesel L70	CINGA76		Ø 170	PUL/YANM/R	
	MCH16/DY Standard	Yanmar Diesel L100	CINGA76		Ø 170	PUL/YANM/R	
	MCH13/SH Tech	Honda Benzin GX270	CINGA76		Ø 170	PUL/HOND/R	
	MCH16/SH Tech	Honda Benzin GX270	CINGA76		Ø 170	PUL/HOND/R	
	MCH13/DL Tech	Lombardini Diesel D350	CINGA76		Ø 170	PUL/LOMB/R	
	MCH16/DL Tech	Lombardini Diesel D400	CINGA76		Ø 170	PUL/LOMB/R	
	MCH13/DY Tech	Yanmar Diesel L70	CINGA76		Ø 170	PUL/YANM/R	
	MCH16/DY Tech	Yanmar Diesel L100	CINGA76		Ø 170	PUL/YANM/R	
	MCH13/SH MiniTech	Honda Benzin GX270	CINGA76		Ø 170	PUL/HOND/R	
	MCH16/SH MiniTech	Honda Benzin GX270	CINGA76		Ø 170	PUL/HOND/R	
	MCH13/DL MiniTech	Lombardini Diesel D350	CINGA76		Ø 170	PUL/LOMB/R	
	MCH16/DL MiniTech	Lombardini Diesel D400	CINGA76		Ø 170	PUL/LOMB/R	
	MCH13/DY MiniTech	Yanmar Diesel L70	CINGA76		Ø 170	PUL/YANM/R	
	MCH16/DY MiniTech	Yanmar Diesel L100	CINGA76		Ø 170	PUL/YANM/R	
MOTORI ELETTRICI / ELECTRIC ENGINE	MCH8/EM Standard	Single-phase electric 3Kw-4Hp 230V 50Hz	CINGA68		Ø 140	PUL/140	
		Single-phase electric 3Kw-4Hp 230V 60Hz	CINGA67		Ø 100	SC000403/1	
	MCH11/EM Standard	Single-phase electric 4Kw-5.5Hp 230V 50Hz	CINGA70		Ø 190	PUL/190	
		Single-phase electric 4Kw-5.5Hp 230V 60Hz	CINGA69		Ø 170	PUL/170	
	MCH13/ET Standard	Three-phase electric 4Kw-5.5Hp 230V 50Hz	CINGA71		Ø 200	PUL/200/ELETTR	
		Three-phase electric 4Kw-5.5Hp 400V 50Hz	CINGA71		Ø 220	SC000406	
		Three-phase electric 4Kw-5.5Hp 230V 60Hz	CINGA69		Ø 170	PUL/170	
		Three-phase electric 4.8Kw-6.5Hp 440V 60Hz	CINGA69		Ø 170	PUL/170	
	MCH16/ET Standard	Three-phase electric 5.5Kw-7.5Hp 230V 50Hz	CINGA73		Ø 250	PUL/250	
		Three-phase electric 5.5Kw-7.5Hp 400V 50Hz	CINGA73		Ø 250	PUL/250	
		Three-phase electric 5.5Kw-7.5Hp 230V 60Hz	CINGA70		Ø 190	PUL/190	
		Three-phase electric 6.6Kw-9Hp 440V 60Hz	CINGA70		Ø 190	PUL/190	
	MCH8/EM Compact	Single-phase electric 3Kw-4Hp 230V 50Hz	CINGA69		Ø 140	PUL/140	
		Single-phase electric 3Kw-4Hp 230V 60Hz	CINGA67		Ø 100	SC000403/1	
	MCH11/EM Compact	Single-phase electric 4Kw-5.5Hp 230V 50Hz	CINGA70		Ø 190	PUL/190	
		Single-phase electric 4Kw-5.5Hp 230V 60Hz	CINGA69		Ø 170	PUL/170	
	MCH13/ET Compact	Three-phase electric 4Kw-5.5Hp 230V 50Hz	CINGA71		Ø 200	PUL/200/ELETTR	
		Three-phase electric 4Kw-5.5Hp 400V 50Hz	CINGA72		Ø 220	SC000406	
		Three-phase electric 4.8Kw-6.5Hp 230V 60Hz	CINGA70		Ø 170	PUL/170	
		Three-phase electric 4.8Kw-6.5Hp 440V 60Hz	CINGA70		Ø 170	PUL/170	
	MCH16/ET Compact	Three-phase electric 5.5Kw-7.5Hp 230V 50Hz	CINGA74		Ø 250	PUL/250	
		Three-phase electric 5.5Kw-7.5Hp 400V 50Hz	CINGA74		Ø 250	PUL/250	
		Three-phase electric 6.6Kw-9Hp 230V 60Hz	CINGA71		Ø 190	PUL/190	
		Three-phase electric 6.6Kw-9Hp 440V 60Hz	CINGA71		Ø 190	PUL/190	
	MCH26/ET Compact	Three-phase electric 2x4Kw-2x5.5Hp 230V 50Hz	CINGA71		Ø 220	SC000406	
		Three-phase electric 2x4Kw-2x5.5Hp 400V 50Hz	CINGA71		Ø 220	SC000406	
		Three-phase electric 2x4.8Kw-2x6.5Hp 230V 60Hz	CINGA69		Ø 170	PUL/170	
		Three-phase electric 2x4.8Kw-2x6.5Hp 440V 60Hz	CINGA69		Ø 170	PUL/170	
	MCH32/ET Compact	Three-phase electric 2x5.5Kw-2x7.5Hp 230V 50Hz	CINGA73		Ø 250	PUL/250	
		Three-phase electric 2x5.5Kw-2x7.5Hp 400V 50Hz	CINGA73		Ø 250	PUL/250	
		Three-phase electric 2x6.6Kw-2x9Hp 230V 60Hz	CINGA70		Ø 190	PUL/190	
		Three-phase electric 2x6.6Kw-2x9Hp 440V 60Hz	CINGA70		Ø 190	PUL/190	
	MCH13/ET Compact Evo	Three-phase electric 4Kw-5.5Hp 230V 50Hz	CINGA71		Ø 200	PUL/200/ELETTR	
		Three-phase electric 4Kw-5.5Hp 400V 50Hz	CINGA72		Ø 220	SC000406	
		Three-phase electric 4.8Kw-6.5Hp 230V 60Hz	CINGA70		Ø 170	PUL/170	
		Three-phase electric 4.8Kw-6.5Hp 440V 60Hz	CINGA70		Ø 170	PUL/170	
	MCH16/ET Compact Evo	Three-phase electric 5.5Kw-7.5Hp 230V 50Hz	CINGA74		Ø 250	PUL/250	
		Three-phase electric 5.5Kw-7.5Hp 400V 50Hz	CINGA74		Ø 250	PUL/250	
		Three-phase electric 6.6Kw-9Hp 230V 60Hz	CINGA71		Ø 190	PUL/190	
		Three-phase electric 6.6Kw-9Hp 440V 60Hz	CINGA71		Ø 190	PUL/190	

PULEGGIA MOTORE/CINGHIA DI TRASMISSIONE
ENGINE PULLEY/TRANSMISSION BELT

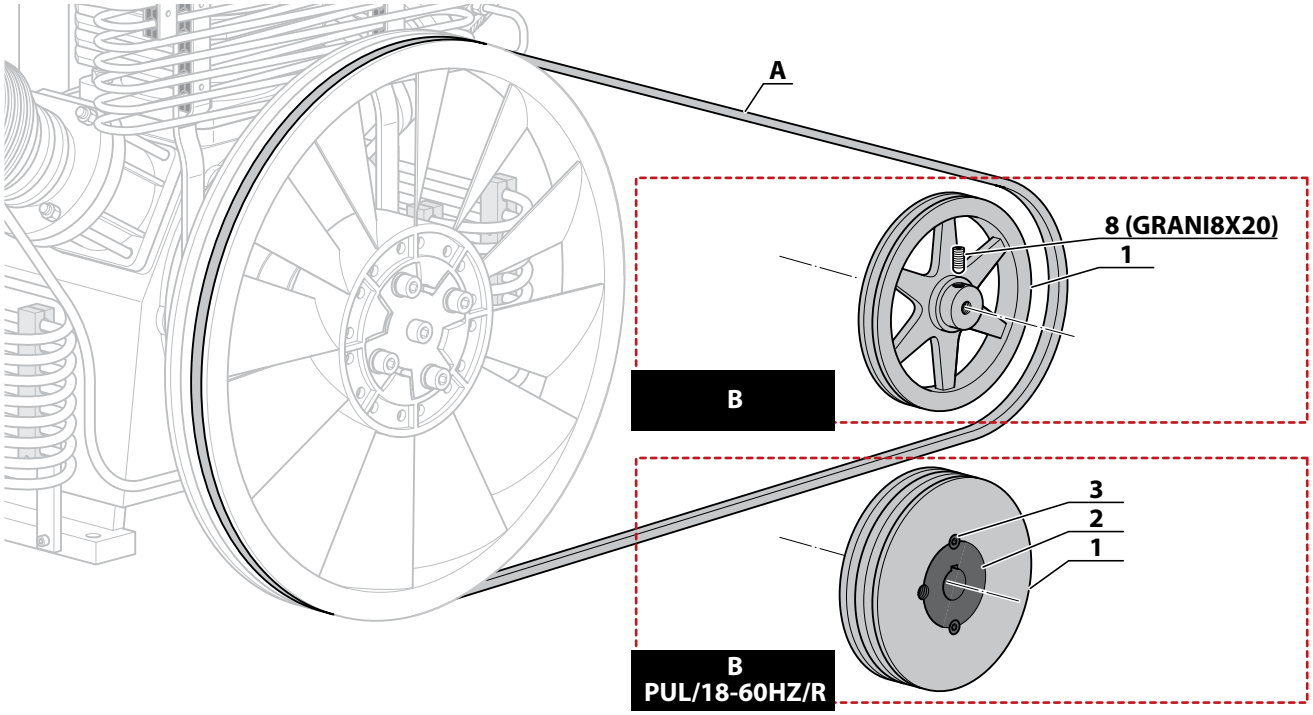

MOTORI ELETTRICI / *ELECTRIC ENGINE*

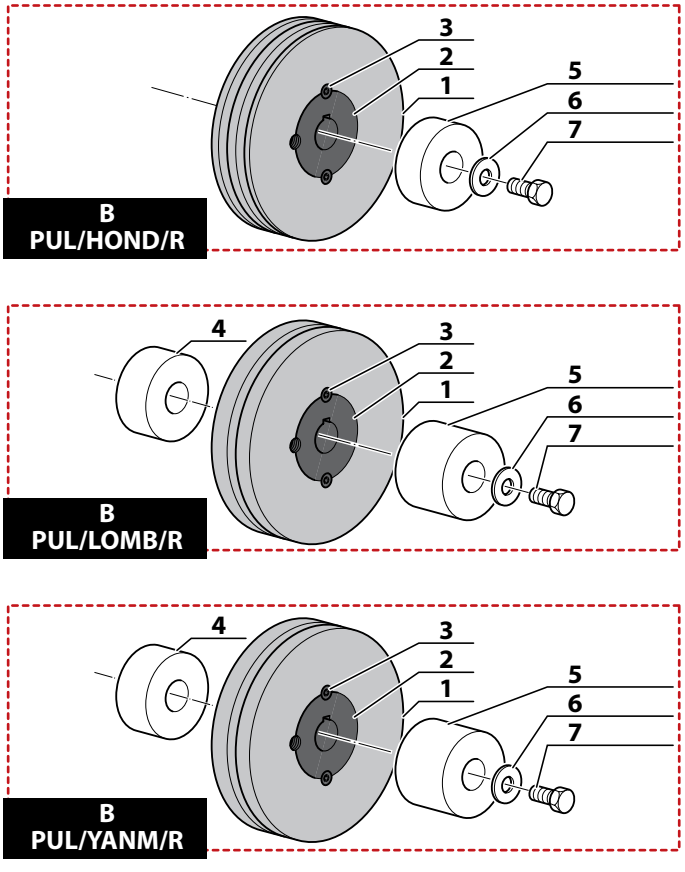

MOTORI BENZINA - DIESEL / *BENZIN-DIESEL ENGINE*

PULEGGIA MOTORE/CINGHIA DI TRASMISSIONE
ENGINE PULLEY/TRANSMISSION BELT

MOTORI ELETTRICI / ELECTRIC ENGINE

Compressore Compressor	Motore Powered by	Cinghia (A) Belt (A)		Ø Puleggia Ø Pulley	Puleggia (B) Pulley (B)	
MCH18/ET Compact Evo	Three-phase electric 7.5Kw-10Hp 230V 50Hz	CINGA76		Ø 280	PUL/18-60HZ/R	
	Three-phase electric 7.5Kw-10Hp 400V 50Hz	CINGA76		Ø 280	PUL/18-60HZ/R	
	Three-phase electric 7.5Kw-10Hp 230V 60Hz	CINGA73		Ø 220	SC000406	
	Three-phase electric 7.5Kw-10Hp 440V 60Hz	CINGA73		Ø 220	SC000406	
MCH13/ET Compact M	Three-phase electric 4Kw-5.5Hp 230V 50Hz	CINGA71		Ø 200	PUL/200/ELETTR	
	Three-phase electric 4Kw-5.5Hp 400V 50Hz	CINGA72		Ø 220	SC000406	
	Three-phase electric 4.8Kw-6.5Hp 230V 60Hz	CINGA70		Ø 170	PUL/170	
	Three-phase electric 4.8Kw-6.5Hp 440V 60Hz	CINGA70		Ø 170	PUL/170	
MCH16/ET Compact M	Three-phase electric 5.5Kw-7.5Hp 230V 50Hz	CINGA74		Ø 250	PUL/250	
	Three-phase electric 5.5Kw-7.5Hp 400V 50Hz	CINGA74		Ø 250	PUL/250	
	Three-phase electric 6.6Kw-9Hp 230V 60Hz	CINGA71		Ø 190	PUL/190	
	Three-phase electric 6.6Kw-9Hp 440V 60Hz	CINGA71		Ø 190	PUL/190	
MCH16/EM Compact E1	Three-phase electric 5.5Kw-7.5Hp 230V 50Hz	-		-	0	
	Three-phase electric 5.5Kw-7.5Hp 230V 60Hz	-		-	0	
MCH13/ETS SuperSilent Evo	Three-phase electric 4Kw-5.5Hp 230V 50Hz	CINGA72		Ø 220	SC000406	
	Three-phase electric 4Kw-5.5Hp 400V 50Hz	CINGA72		Ø 220	SC000406	
	Three-phase electric 4.8Kw-6.5Hp 230V 60Hz	CINGA70		Ø 170	PUL/170	
	Three-phase electric 4.8Kw-6.5Hp 440V 60Hz	CINGA70		Ø 170	PUL/170	
MCH16/ETS SuperSilent Evo	Three-phase electric 5.5Kw-7.5Hp 230V 50Hz	CINGA74		Ø 250	PUL/250	
	Three-phase electric 5.5Kw-7.5Hp 400V 50Hz	CINGA74		Ø 250	PUL/250	
	Three-phase electric 6.6Kw-9Hp 230V 60Hz	CINGA71		Ø 190	PUL/190	
	Three-phase electric 6.6Kw-9Hp 440V 60Hz	CINGA71		Ø 190	PUL/190	
MCH18/ETS SuperSilent Evo	Three-phase electric 7.5Kw-10Hp 230V 50Hz	CINGA76		Ø 280	PUL/18-60HZ/R	
	Three-phase electric 7.5Kw-10Hp 400V 50Hz	CINGA76		Ø 280	PUL/18-60HZ/R	
	Three-phase electric 7.5Kw-10Hp 230V 60Hz	CINGA71		Ø 220	SC000406	
	Three-phase electric 7.5Kw-10Hp 440V 60Hz	CINGA71		Ø 220	SC000406	
MCH13/ETS MiniSilent	Three-phase electric 4Kw-5.5Hp 230V 50Hz	CINGA71		Ø 220	SC000406	
	Three-phase electric 4Kw-5.5Hp 400V 50Hz	CINGA71		Ø 220	SC000406	
	Three-phase electric 4.8Kw-6.5Hp 230V 60Hz	CINGA69		Ø 170	PUL/170	
	Three-phase electric 4.8Kw-6.5Hp 440V 60Hz	CINGA69		Ø 170	PUL/170	
MCH16/ETS MiniSilent	Three-phase electric 5.5Kw-7.5Hp 230V 50Hz	CINGA73		Ø 250	PUL/250	
	Three-phase electric 5.5Kw-7.5Hp 400V 50Hz	CINGA73		Ø 250	PUL/250	
	Three-phase electric 6.6Kw-9Hp 230V 60Hz	CINGA70		Ø 190	PUL/190	
	Three-phase electric 6.6Kw-9Hp 440V 60Hz	CINGA70		Ø 190	PUL/190	

PULEGGIA MOTORE/CINGHIA DI TRASMISSIONE
ENGINE PULLEY/TRANSMISSION BELT

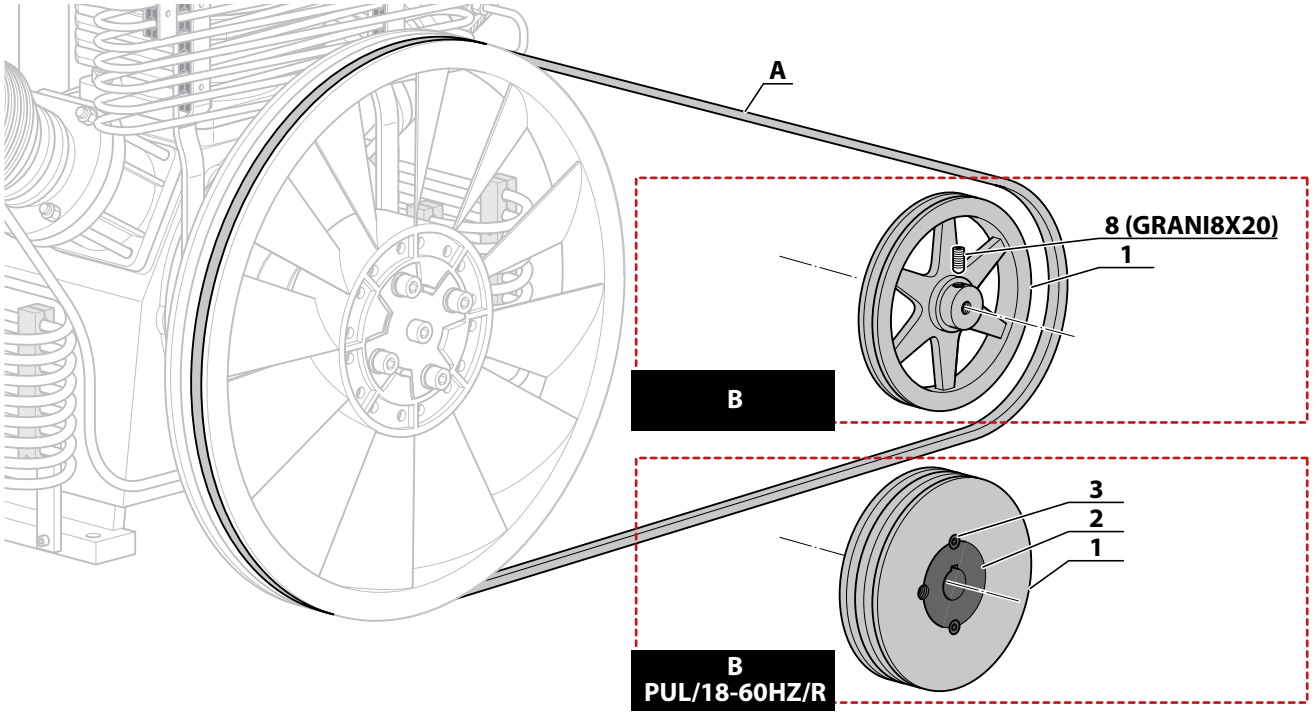

MOTORI ELETTRICI / *ELECTRIC ENGINE*

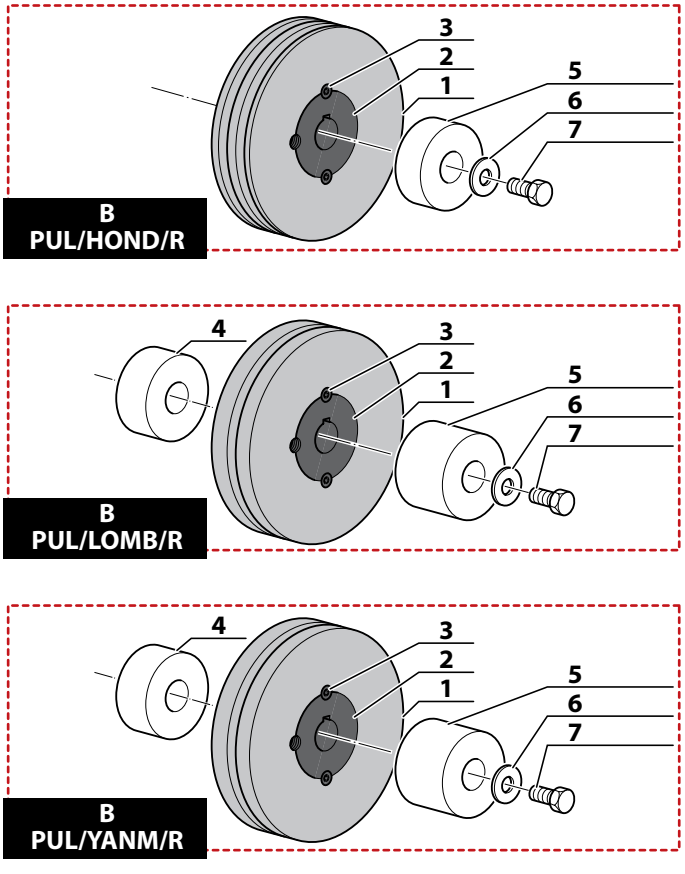

MOTORI BENZINA - DIESEL / *BENZIN-DIESEL ENGINE*

ATTACCHI PER RICARICA BOMBOLE - CYLINDER REFILL CONNECTORS

Rif. Pos.	Q.tà Q.ty	Codice Code	Descrizione	Description
142	1	RE100350	Riduttore DIN/INT	Connector DIN/INT
147	1	SC000470	Attacco BC DIN 230	BC Valve DIN 230
148	1	SC000460/SP	Attacco BC DIN 300 USA	BC Valve DIN 300 USA
149	1	SC000460	Attacco BC DIN 300	BC Valve DIN 300
150	1	SC000475	Attacco BC Italia per autoprotettori SCBA	BC Valve Italian SCBA
151	1	SC000450	AttaccoBC INT	BC Valve INT

ATTACCHI PER RICARICA BOMBOLE - CYLINDER REFILL CONNECTORS

A richiesta - *On request*

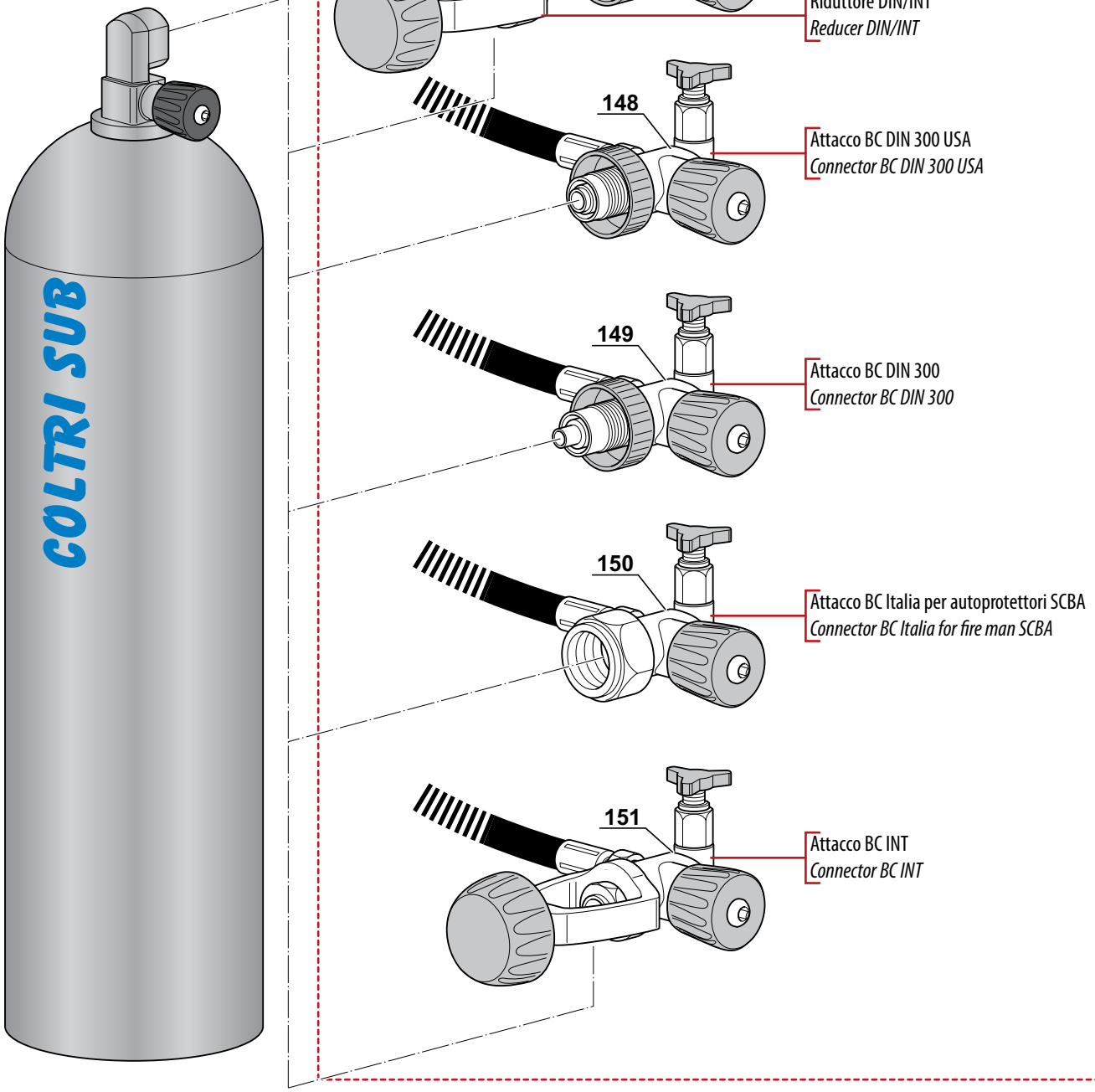

147 Attacco BC DIN 230
Connector BC DIN 230

142 Riduttore DIN/INT
Reducer DIN/INT

148 Attacco BC DIN 300 USA
Connector BC DIN 300 USA

149 Attacco BC DIN 300
Connector BC DIN 300

150 Attacco BC Italia per autoprotettori SCBA
Connector BC Italia for fire man SCBA

151 Attacco BC INT
Connector BC INT

COLTRI ASIA PACIFIC
No. 94/5 , Moo. 3 , T. Khao Hin Sorn
A .Phanomsarakarm, Chachoengsao. 24120 Thailand
Tel: + 66 38 855 103 to 5 Fax: + 66 38 855 106
www.aerotecnicacoltriasiapacific.com
e-mail: c.benelli@aerotecnicacoltriasiapacific.com

COLTRI SUB EGYPT
El Rowayset (Industrial Area)
Sharm El Sheikh - South Sinai - Egypt
Tel: +20 (0) 366 44 74
Fax: +20 (0) 366 44 73
www.coltrisubegypt.com
e-mail: info@coltrisubegypt.com
bruno@coltrisubegypt.com
tim@coltrisubegypt.com

COLTRI AMERICAS
12493 NW 44th Street, Unit5
Coral Springs, FL 33065
Tel: 1-954-344-2420
Fax: 1-954-344-2421
www.coltriamericas.com
e-mail: info@coltriamericas.com
david@coltriamericas.com

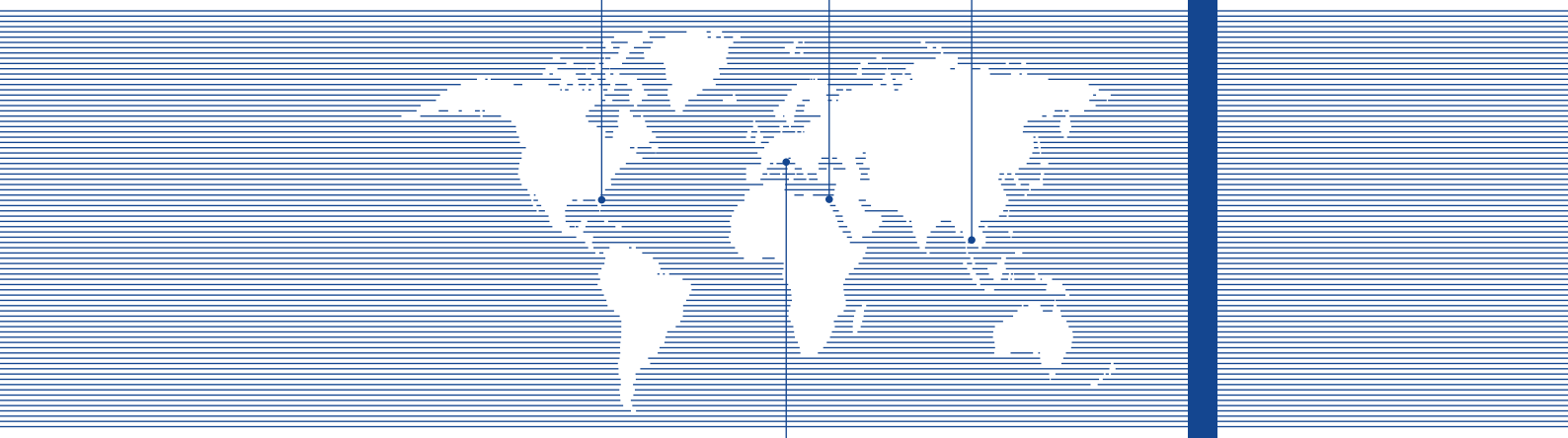

COLTRI® COMPRESSORS MADE IN ITALY

AEROTECNICA COLTRI Spa
Via Colli Storici, 177
25010 SAN MARTINO DELLA BATTAGLIA (BS) ITALY
Tel. +39 030 9910301
Fax. +39 030 9910283
www.coltricompressor.com